higher education & training

Department:
Higher Education and Training
REPUBLIC OF SOUTH AFRICA

MARKING GUIDELINE

NATIONAL CERTIFICATE (VOCATIONAL)

ELECTRONICS
NQF LEVEL 2

15 November 2024

This marking guideline consists of 7 pages.

Copyright reserved

QUESTION 1

1.1 1.1.1 C
1.1.2 D
1.1.3 A
1.1.4 A
1.1.5 C

(5 × 1) (5)

1.2 1.2.1

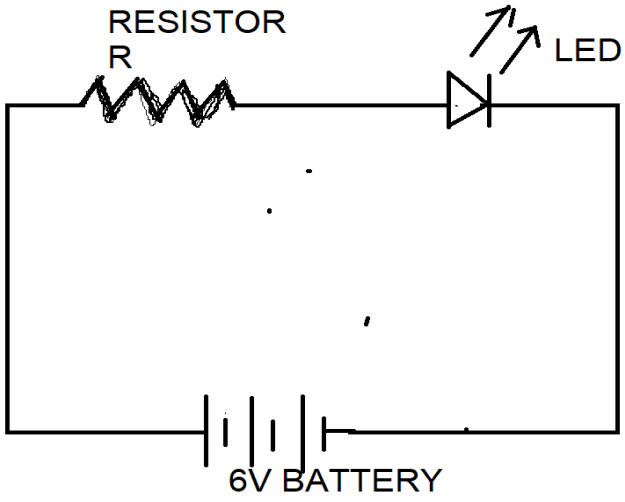

✓✓✓✓✓ (5)

1.2.2 Vr = 6 V-1,2 V = 4,8 V✓✓

R = 4,8/0,02✓✓

R = 240 Ω✓ (5)

[15]

QUESTION 2

2.1 2.1.1 False
2.1.2 False
2.1.3 True
2.1.4 False
2.1.5 True

(5 × 1) (5)

2.2

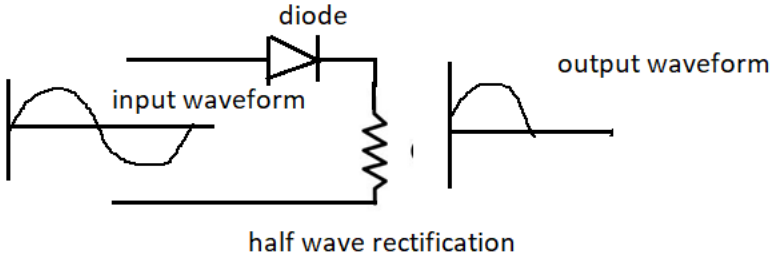

✓✓✓ (3)

2.3

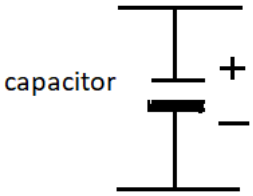

simple filter circuit ✓✓ (2)

[10]

QUESTION 3

3.1

3.1.1	C
3.1.2	E
3.1.3	A
3.1.4	B
3.1.5	D

(5 × 1) (5)

3.2

- Take care of his or her own health and safety.
- Prevent harm to other persons in the workplace.
- Provide information to a labour inspector.
- Do not interfere with safety equipment.
- Wear safety clothing or use safety equipment where it is required.
- Cooperate with the employer to improve health and safety in the workplace.

(Any 5 × 1) (5)

[10]

QUESTION 4

4.1 4.1.1 parallel
4.1.2 potential
4.1.3 series
4.1.4 current

(4 × 1) (4)

4.2

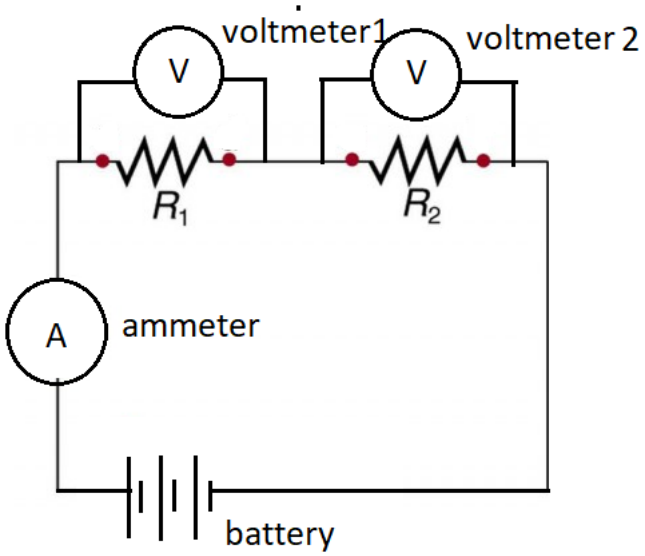

✓✓✓ (3)

4.2 PPE = personal protective equipment✓ (1)

Examples of PPE:

- Safety gloves✓
- Eye protection✓
- Overalls or dustcoats
- High visibility clothing
- Safety footwear
- Safety harnesses
- Ear covers

(Examples – any 2 × 1) (2)

[10]

QUESTION 5

5.1
- Always keep the tip coated with a thin layer of solder.
- Use flux that is as mild as possible but still provides a strong solder joint.
- Keep the temperature as low as possible while maintaining it high enough to quickly solder the joint (2 to 3 seconds maximum for electronic soldering.
- Match the tip size to the work.
- Use a tip with the with the shortest reach possible for maximum efficiency. (5)

5.2

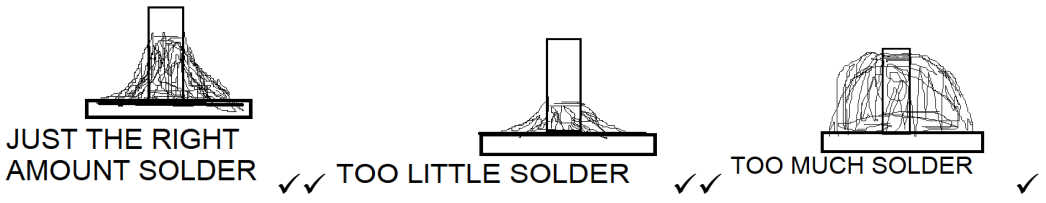

(5)
[10]

QUESTION 6

6.1
- Plan every job.
- Think about what could be wrong.
- Use the right tools for the job.
- Use procedures, drawings and other documents as tools to do the job.
- Isolate the equipment from energy sources.
- Identify the electrical shock and arc flash, as well as other hazards that may be present.
- Minimise danger by using guarding or approach limitations.
- Test every circuit, every conductor, every time before you touch it.
- Use personal protective equipment as a last line of defence in case something goes wrong.
- Ask yourself: do I have the skills, knowledge, tools and experience to do the work safely? (Any 5 × 1) (5)

6.2
- Soldering iron and stand
- Digital multi meter
- Two flats and two Phillips screwdrivers – one small and one big
- Small side cutter
- Small long-nose pliers
- Utility knife (6)

6.3

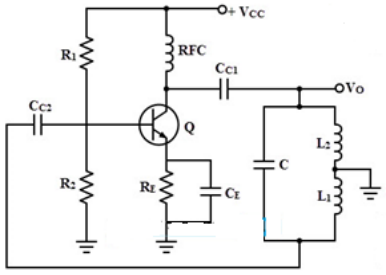

A resistor reference designator starts with R,✓ capacitors start with C, inductors start with L,✓ transistors start with Q, etc.✓ The letters are usually followed by numbers which help to easily identify the component from a group of similar ones.✓ (4)

[15]

QUESTION 7

7.1 Analogue signals reproduce real-world data,✓ while digital signals convert this data into binary form.✓ Interference can distort analogue signals, making them unclear. Digital signals, however, remain clear despite interference because they only need to distinguish between ones and zeros.✓ (3)

7.2

A	B	X
0	0✓	0
0	1	1
1	0	1
1	1	1✓

(2)

[5]

QUESTION 8

8.1
- FBD (function block diagram)
- LD (ladder diagram)
- ST (structured text, similar to the Pascal programming language)
- IL (instruction list, similar to assembly language)
- SFC (sequential function chart) (5)

8.2

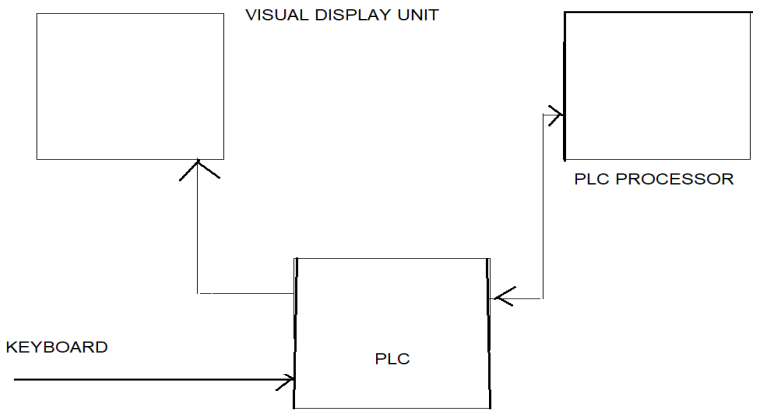

✓✓✓✓✓ (5)

8.3

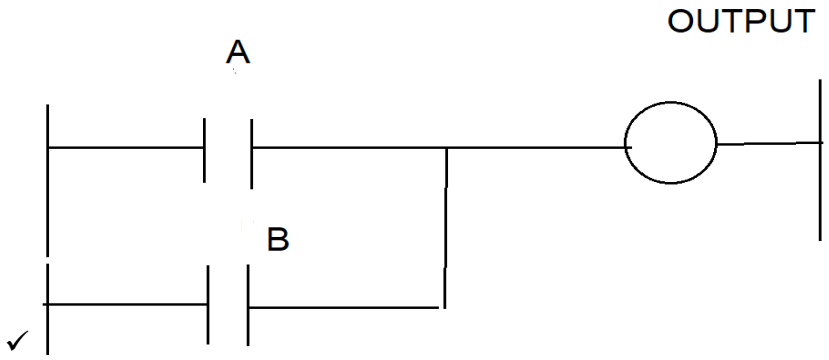

✓ ✓✓✓✓ (5)

[15]

QUESTION 9

9.1

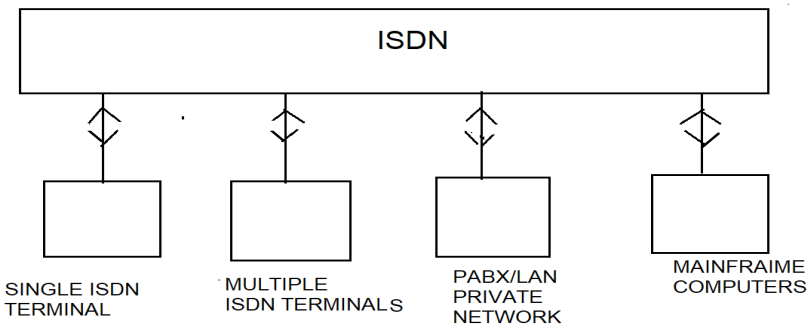

✓✓✓✓✓✓ (6)

9.2

- Polling
- Circuit switching
- Token passing
- Carrier sense multiple access (CSMA) (4)

[10]

TOTAL: 100

Copyright reserved