higher education & training

Department:
Higher Education and Training
REPUBLIC OF SOUTH AFRICA

MARKING GUIDELINE

NATIONAL CERTIFICATE (VOCATIONAL)

ELECTRONIC AND DIGITAL CONCEPTS FOR ROBOTICS

(First paper)

NQF LEVEL 3

13 November 2024

This marking guideline consists of 6 pages.

Copyright reserved

SECTION A

QUESTION 1

1.1 A✓
1.2 D✓
1.3 D✓
1.4 B✓
1.5 C✓
1.6 B✓
1.7 A✓
1.8 D✓
1.9 D✓
1.10 A✓

(10 × 1) **[10]**

QUESTION 2

2.1 True✓
2.2 False✓
2.3 True✓
2.4 False✓
2.5 True✓
2.6 False✓
2.7 True✓
2.8 False✓
2.9 True✓
2.10 False✓

(10 × 1) **[10]**

QUESTION 3

3.1 K✓
3.2 I✓
3.3 G✓
3.4 A✓
3.5 L✓
3.6 C✓
3.7 D✓
3.8 F✓
3.9 E✓
3.10 B✓

(10 × 1) **[10]**

TOTAL SECTION A 30

Copyright reserved

SECTION B

QUESTION 4

4.1 Emf = Blv✓
= 0.36 × 1.25 × 12✓
= 5.4 V✓ (3)

4.2 H = mmf/l✓
= 200.9/0.25✓
= 803.6 A/m✓ (3)

4.3.1 $\frac{Vs}{Vp} = \frac{Ns}{Np}$

$Vs = \frac{Vp \times Ns}{Np}$✓

$= \frac{240 \times 2}{50}$✓

$= 9{,}6V$✓

4.3.2 $Isec = \frac{Vs}{RL}$✓

$Isec = \frac{9{,}6}{2000}$✓

$Isec = 4{,}8\,mA$✓

4.3.3 $\frac{Ip}{Is} = \frac{Ns}{Np}$

$Ip = \frac{Is \times Ns}{Np}$✓

$= \frac{4{,}8\,mA \times 2}{50}$✓

$= 192\ \mu A$✓

(3 × 3) (9)

4.4

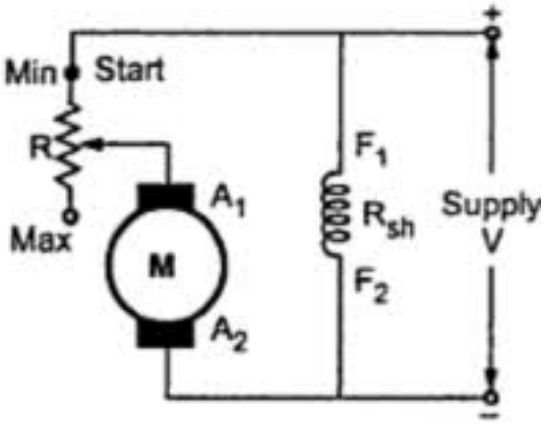

Correct diagram only, 2 marks
1 mark each for any 4 correct labels (6)
[21]

QUESTION 5

5.1 5.1.1 Variable inductor✓

5.1.2 Schottky diode✓

5.1.3 PNP bipolar transistor or PNP✓

5.1.4 NTC or Thermistor negative temperature coefficient or Thermistor✓

5.1.5 LDR or Light sensitive resistor ✓

(5 × 1) (5)

5.2
- They provide more accurate measurements and readings.✓
- The reduced reading and interpolation increase the accuracy of the measurement when the full range of the meter is not needed.✓
- They are portable.✓
- They provide a very high input impedance which does not affect the measurements.✓
- There is less meter loading effects on the circuits being tested.
- Advanced models can store data.✓
- Can be used for measuring various parameters.✓
- Has no moving parts.✓
- Parallax errors are eliminated.✓
- Reduced cost and power requirements are reduced.✓
- Easy to use.✓
- Has auto ranging feature.✓
- Provide a polarity.✓ (Any 10 points.) (10)

[15]

QUESTION 6

6.1
- Always store measuring instruments in a clean, dry storage area on suitable shelves.✓
- Become accustomed to the operating instructions of any instrument before using it.✓
- Check batteries and change them when it is low.✓
- Remove batteries if the meter is stored for longer than a month.✓
- Examine the test leads and probes for damage.✓
- Guard instruments from moisture, oil, dirt, electromagnetic fields, and extreme heat.✓
- Keep instruments in their protective case or pouch.✓
- Always follow the manufacturer's instructions when using testing instruments.✓
- Never attempt to repair testing instruments yourself.✓
- Measuring instruments should be recalibrated.✓

(Any applicable alternative response is acceptable.) (10)

6.2
- An infinite open loop gain G = V out/Vin✓
- An infinite input impedance Rin and so zero input current. ✓
- Zero input offset voltage✓
- An infinite output voltage range✓
- An infinite bandwidth with zero phase shift and infinite slew rate.✓
- Zero output impedance rout and so infinite output current range.✓
- Zero noise✓
- An infinite common-mode rejection ratio (CMRR)✓
- An infinite power supply rejection ratio.✓ (Any SIX characteristics) (6)

6.3

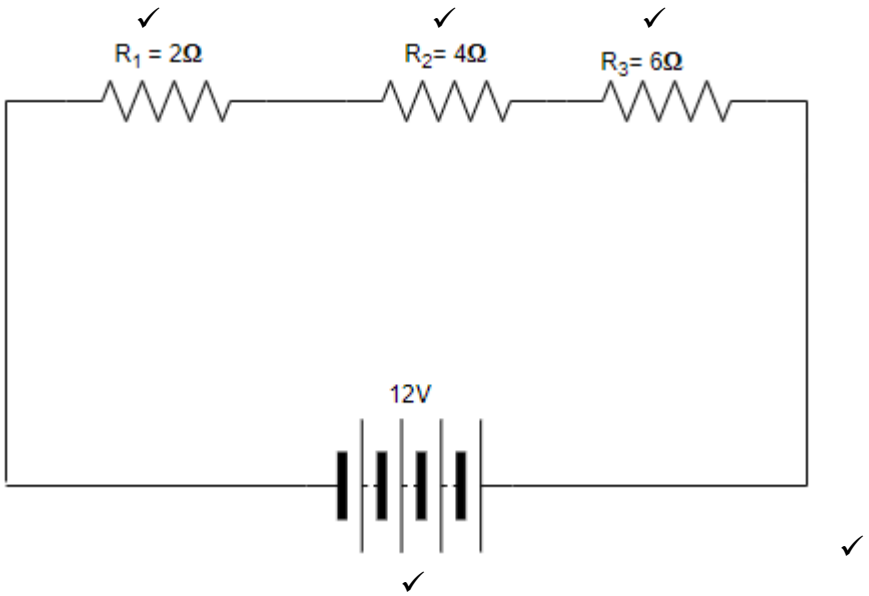

(5)
[21]

QUESTION 7

7.1

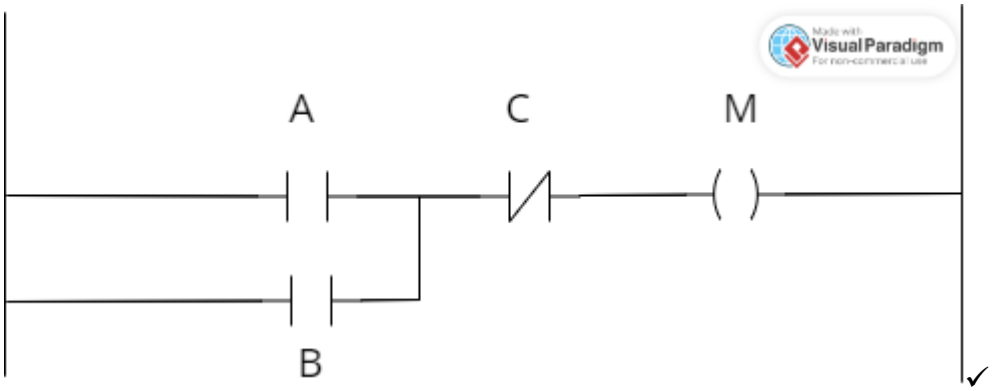

✓ ✓ ✓ ✓ (5)

7.2

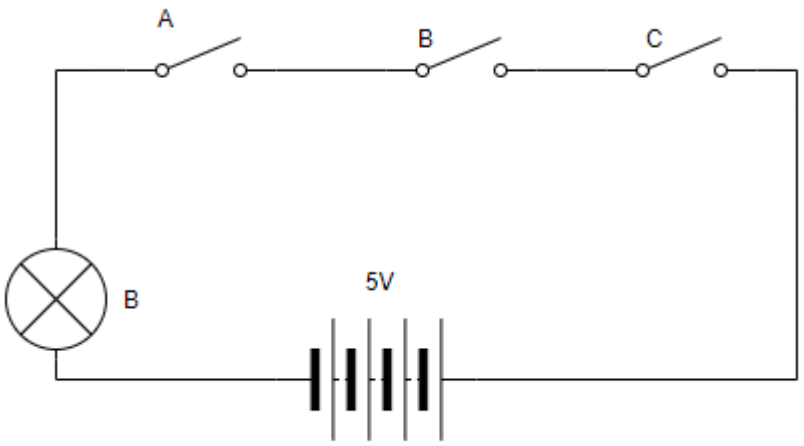

✓ ✓ ✓ ✓Bulb ✓ (5)

7.3
- It is easier to program a PLC than wiring of the control panel relay.✓
- PLCs take less space compared to relay control system.✓
- PLCs are easier to maintain than relays.✓Bu
- PLCs have greater reliability compared to relay.✓
- PLCs can be reprogrammed but relays are rewired and in some cases replaced completely.✓ (Any THREE advantages of PLC.) (3)

[13]

TOTAL SECTION B: 70
GRAND TOTAL: 100

Copyright reserved