higher education & training

Department:
Higher Education and Training
REPUBLIC OF SOUTH AFRICA

MARKING GUIDELINE

NATIONAL CERTIFICATE (VOCATIONAL)

ELECTROTECHNOLOGY
NQF LEVEL 4

15 November 2024

This marking guideline consists of 10 pages.

Copyright reserved

QUESTION 1

1.1 1.1.1 False
1.1.2 True
1.1.3 False
1.1.4 False
1.1.5 True

(5 × 1) (5)

1.2 The quotient of (A) is the difference between the synchronous speed and the actual speed of a rotor,✓ to (B) the synchronous speed, expressed as a ratio, or as a percentage. ✓ (2)

1.3 $I = \frac{V}{R}$ ✓

I = current
V = voltage
R = resistance✓✓ (3)

1.4
- Small in size
- Robust
- Simple in design
- Light and compact
- Low maintenance
- Low cost (cheap)
- Simple in design
- Direct connection on AC
- Self-starting (Any 3 × 1) (3)

1.5 1.5.1 $S = \frac{120\,f}{p}$ ✓

$S = \frac{120\,x\,50}{6}$ ✓

$S = \frac{6000}{6}$ ✓

$S = 1000\,rpm$ ✓ (4)

1.5.2 The speed will reduce (1)

1.5.3
- These motors cannot be used for variable speed jobs as there is no possibility of speed adjustment.
- It requires an external source for supplying DC excitation.
- It cannot be started under load, the starting torque being zero
- It has a tendency to hunt.
- It may fall out of synchronism and stop when overloaded.
- Collector rings and brushes are required.
- These motors are not desirable for some applications like for driving shafts in small workshops that have no power available for starting and in cases where frequent starting or strong starting torque is required. (Any 2 × 1) (2)

[20]

QUESTION 2

2.1

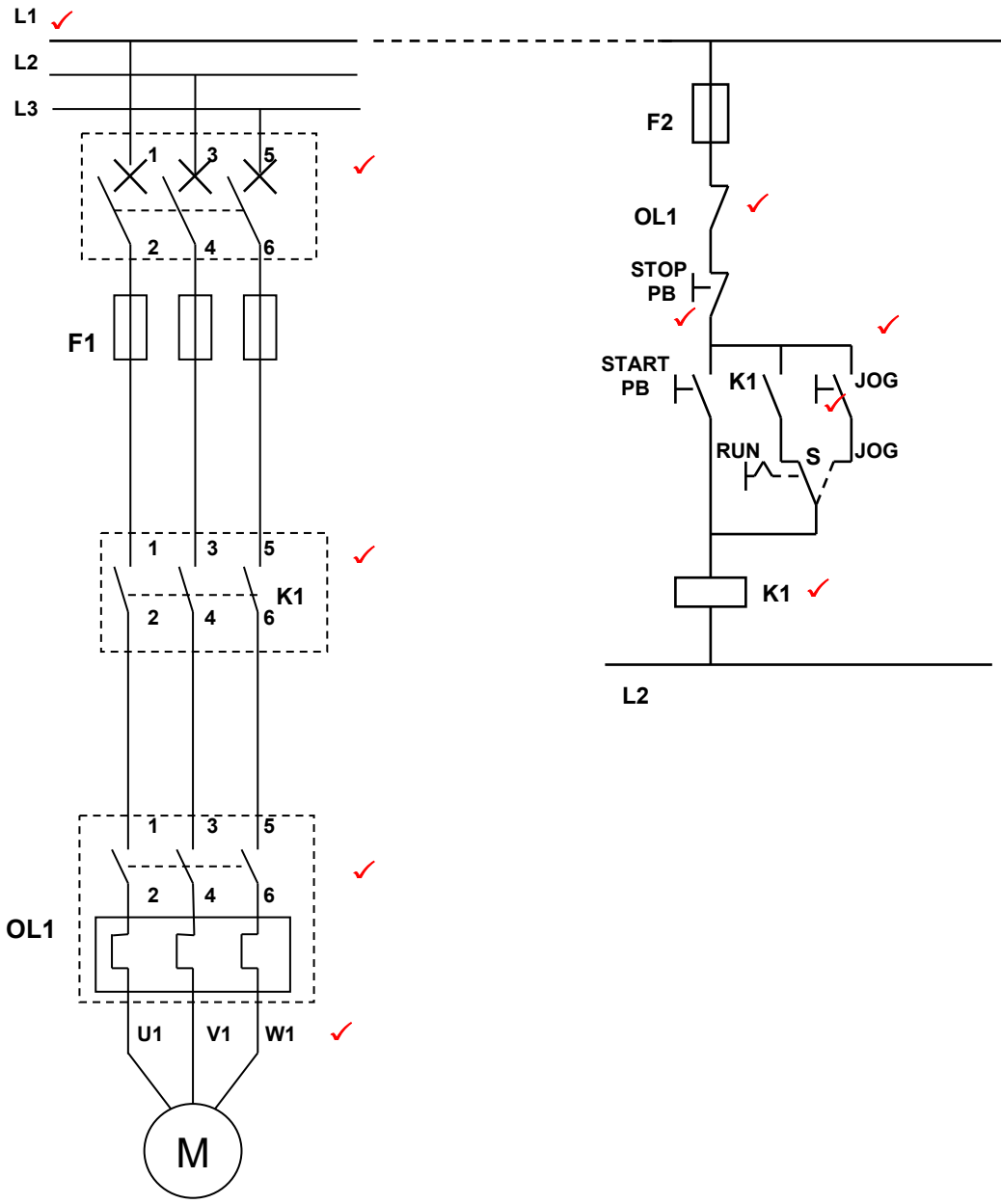

JOG control circuit using a selector switch (10)

2.2 2.2.1 Two–speed motor control (Dahlander control circuit):

- The motor used has an additional set of rotor windings with a different winding ratio housed in the motor.✓
- The control circuit switches between the rotor windings that enable the motor to deliver the rated torque at low or high speed.✓✓
- The coils are switched using control contactors that are interlocked so that they do not energise the rotor coils at the same time.✓
- Each rotor is protected by an overload relay.✓ (5)

2.2.2 Fans, washing machines and hoist motors (1)

2.3 Maintained control

- The circuit goes into operation when the start/stop push button is depressed.
- The coil of K1 is energised over the closed contact, OL, of the overload relay contactor.
- The motor will run as long as the stop/start switch is closed.

Momentary control

- In the momentary control circuit the control coil (K1) is energised when the start push button is depressed, which will sustain contact (K1) in the latched-on position.
- This start push button is only activated momentarily and then released.
- The motor will continue to run over the control relay contacts until the stop push button is pressed. The control coil (K1) will de-energize opening the control coil contacts and turning off the motor.

(2 × 2) (4)
[20]

QUESTION 3

3.1 3.1.1 This is a simplified representation of a circuit with its main parts, which shows how the electrical installation works and how it is subdivided.

3.1.2 This is a detailed representation of a circuit with its components, which shows how the electrical installation works.

3.1.3 This is a special version of an explanatory circuit diagram for the analysis and calculation of circuit characteristics.

(3 × 2) (6)

3.2 3.2.1 D
3.2.2 B
3.2.3 A
3.2.4 C

(4 × 1) (4)

3.3 3.3.1

MATERIAL REQUIREMENTS:		
Item	Description	Quantity
1	Control pendant✓	1
2	N/O Push button − UP✓	1
3	N/O Push button − DOWN✓	1
4	E Stop✓	1
5	Cabling✓	

(5 × 1)

3.3.2

TOOL REQUIREMENTS:		
Item	Description	Quantity
1	Screwdrivers✓	set
2	Pliers✓	1
3	Side cutters✓	1
4	Hacksaw✓	1
5	Pump pliers✓	1

Any other possible tools

(5 × 1) (10)
[20]

Copyright reserved

QUESTION 4

4.1

- Sufficient physical separation should be maintained between electrical noise sources and sensitive equipment to ensure that the noise does not cause malfunctioning or unintended actuation of the control.
- Physical separation should be maintained between sensitive signal wires and electrical power and control conductors. This separation can be accomplished by conduits, wiring trays, or as otherwise recommended by the manufacturer.
- Twisted-pair wiring should be used in critical signal circuits and noise-producing circuits to minimise magnetic interference.
- Shielded wire should be used to reduce the magnitude of the noise coupled to the low-level circuit by electrostatic or magnetic coupling.
- The provisions of the national electrical wiring code regarding grounding should be followed. Additional grounding precautions may be required to minimise electrical noise. These precautions generally deal with ground loop currents arising from multiple ground paths. The manufacturer's recommendations should be followed (Any 3 × 1) (3)

4.2 4.2.1 A PLC program in ladder logic for the circuit.

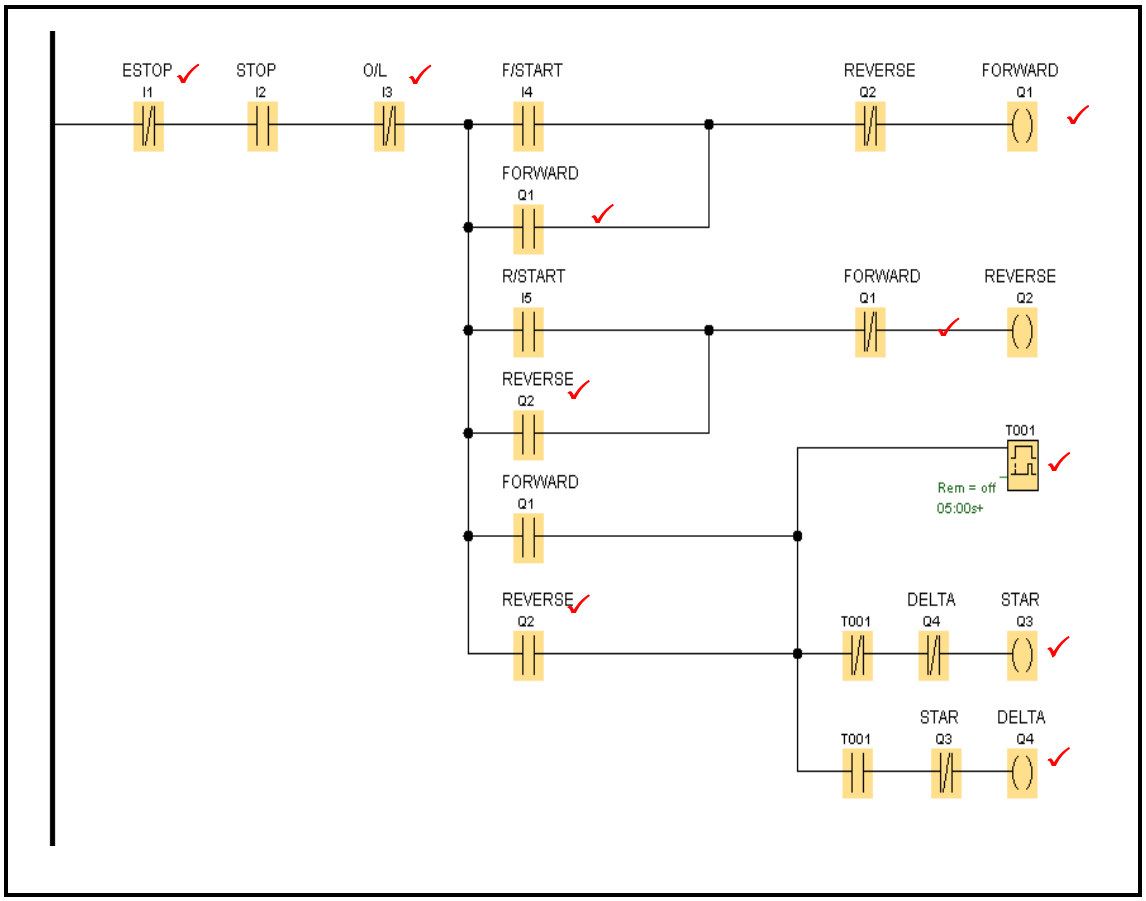

(10)

4.2.2 A PLC wiring diagram.

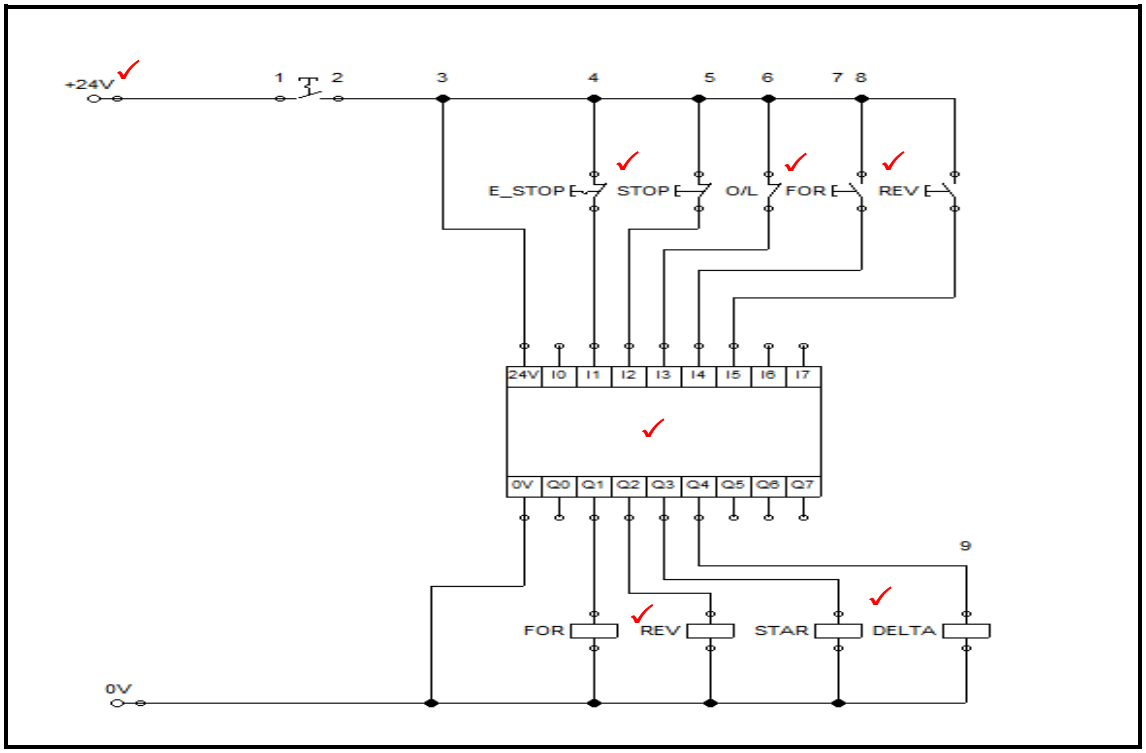

(7)
[20]

QUESTION 5

5.1
- Maintenance must be performed by qualified personnel familiar with the construction, operation, and hazards involved with the system.
- Maintenance should be performed with the system dead and disconnected from all sources of power. If maintenance must be performed while the system is energised, safety-related practices should be followed.
- Care should be taken when servicing electrostatic-sensitive components. The manufacturer's recommendations for these components should be followed.
- Ventilation passages should be kept open. If the equipment depends upon auxiliary cooling, e.g., air, water, or oil, periodic inspection (with filter replacement when necessary) should be done of these systems.
- The means that grounding or insulating of the equipment from the ground should be checked to ensure its integrity.
- Enclosures should be inspected for evidence of deterioration. Accumulated dust and dirt should be removed from the top of the enclosures before opening doors or removing covers.
- Accumulations of dust and dirt on all parts, including on semiconductor heat sinks, should be removed according to the manufacturer's instructions if provided; otherwise, the manufacturer should be consulted. Care must be taken to avoid damaging any delicate components and to avoid displacing dust, dirt, or debris in a way that permits it to enter or settle into parts of the control equipment.
- Certain hazardous materials removed as part of maintenance or repair procedure (e.g., polychlorinated biphenyls (PCBs) found in some liquid-filled capacitors) must be disposed of appropriately. (Any 5 × 1) (5)

5.2 5.2.1 A current exceeding the steady state current for a short period normally described by its peak amplitude and time duration.

5.2.2 Electromagnetic disturbance that manifests itself in performance degradation, malfunction, or failure of electronic equipment.

5.2.3 Is an enclosure formed by conducting material or by a mesh of such material. Such an enclosure blocks out external static electric fields. (3 × 2) (6)

5.3
- Heat sink temperature check
- Cooling fans
- Capacitors
- Control panel
- Battery (Any 4 × 1) (4)

Copyright reserved

5.4 5.4.1
- The circuit before the point where the input supply power is connected and where the filtering starts is referred to as the clean side.
- Enclosed, wall-mounted drives are designed so that the circuit followed by the output connection is the only dirty part. (2 × 2) (4)

5.4.2 To be able to keep the clean side “clean”, the dirty parts are separated into a Faraday cage. This can be done either with separation plates or with cabling. (1)
[20]

TOTAL: 100

Copyright reserved