higher education & training

Department:
Higher Education and Training
REPUBLIC OF SOUTH AFRICA

MARKING GUIDELINE

NATIONAL CERTIFICATE (VOCATIONAL)

ELECTRONICS AND DIGITAL CONCEPTS FOR ROBOTICS
NQF LEVEL 2
(Second paper)

27 November 2024

This marking guideline consists of 4 pages.

Copyright reserved

QUESTION 1

1.1

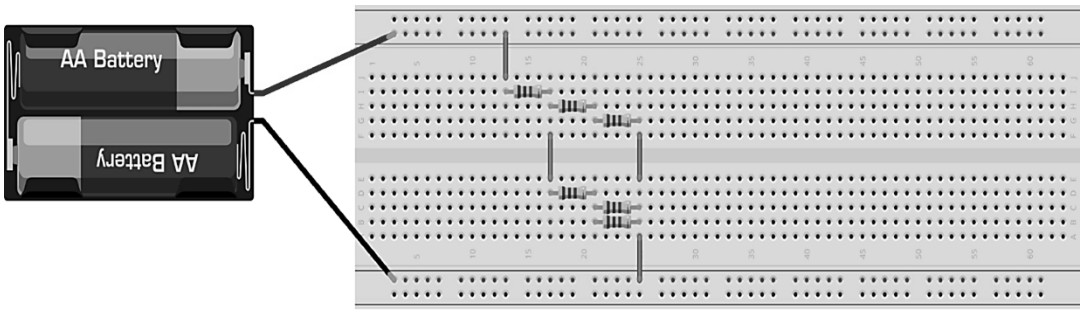

2 marks for each component: 6 × 2 = 12 marks✓✓✓✓✓✓✓✓✓✓✓✓
2 marks for the battery connection✓✓
1 mark for four wires each✓✓✓✓
2 marks for the breadboard✓✓ (20)

1.2 1.2.1 NPN-transistor✓
1.2.2 Thermistor✓
1.2.3 Potentiometer✓
1.2.4 LED✓
1.2.5 Resistor✓
1.2.6 9 V battery✓

(6 × 1) (6)

1.3

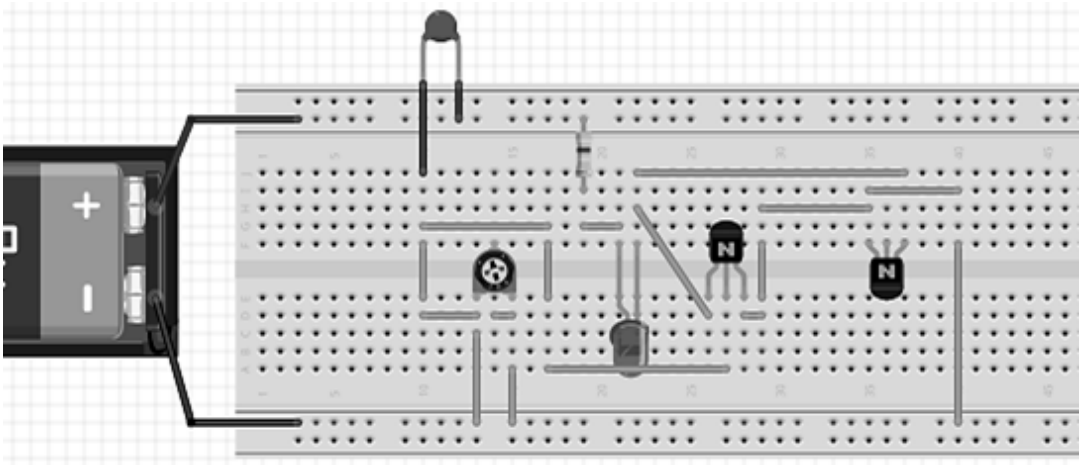

1 mark for the breadboard assembly✓
1 mark for the correct connection✓
1 mark for any small wire each✓✓✓✓✓
1 mark for each long wire✓✓✓✓✓✓
1 mark for the printout✓ (14)
[40]

QUESTION 2

2.1

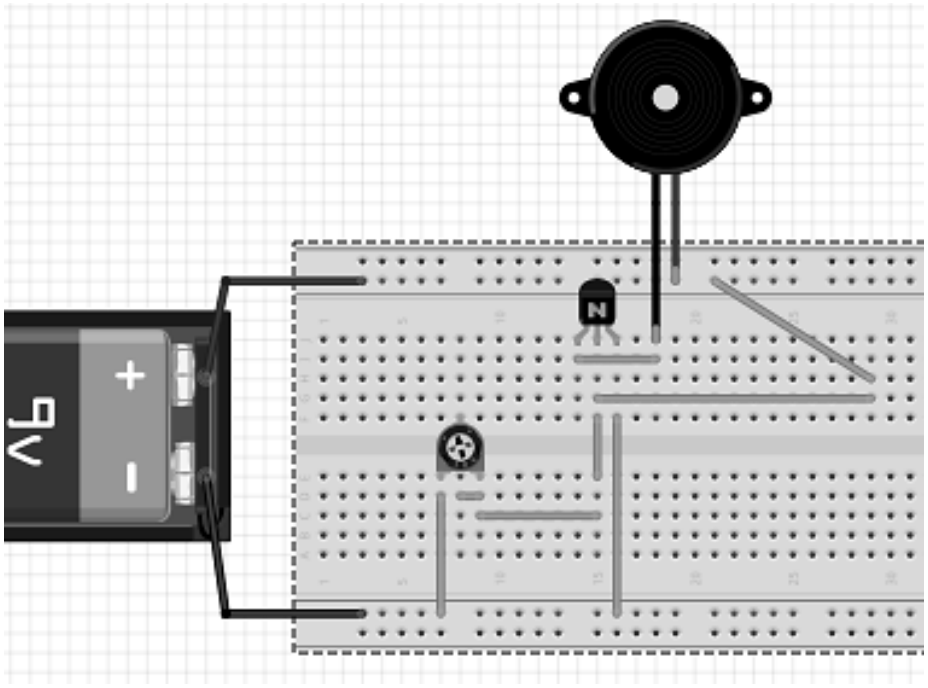

2 marks for the breadboard✓✓
2 marks for the battery✓✓
4 marks for the buzzer✓✓✓✓
4 marks for the potentiometer✓✓✓✓
4 marks for the NPN-transistor✓✓✓✓
3 marks for the probes✓✓✓
1 mark for the printout✓ (20)

2.2 2.2.1 **Truth table: AND gate**

Switch A Input	Switch B Input	Lamp Output
0	0	0✓
0	1	0✓
1	0	0✓
1	1	1✓

1 mark for truth table✓ (5)

2.2.2

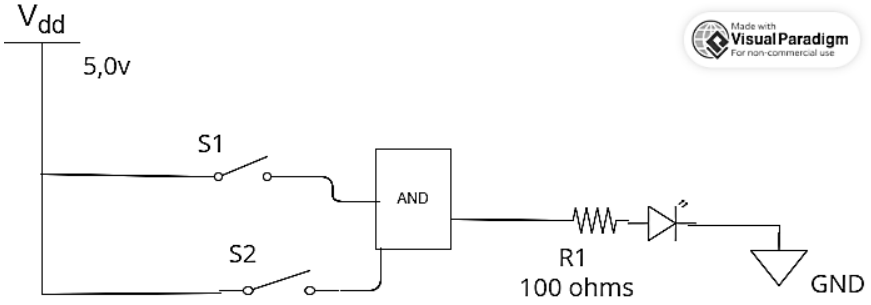

2 marks for the voltage source✓✓
1 mark for Switch 1✓
1 marks for Switch 2✓
4 marks for the AND gate symbol✓✓✓✓
1 marks for the resistor✓
1 marks for LED✓
1 marks for GND✓
4 marks for the circuit connection✓✓✓✓ (15)
[40]

TOTAL: 80

Copyright reserved