higher education & training

Department:
Higher Education and Training
REPUBLIC OF SOUTH AFRICA

MARKING GUIDELINE

NATIONAL CERTIFICATE (VOCATIONAL)

ELECTROTECHNOLOGY
NQF LEVEL 3

6 December 2023

This marking guideline consists of 6 pages.

Copyright reserved

QUESTION 1

1.1
1.1.1 A
1.1.2 C
1.1.3 C
1.1.4 C
1.1.5 D

(5 × 1) (5)

1.2

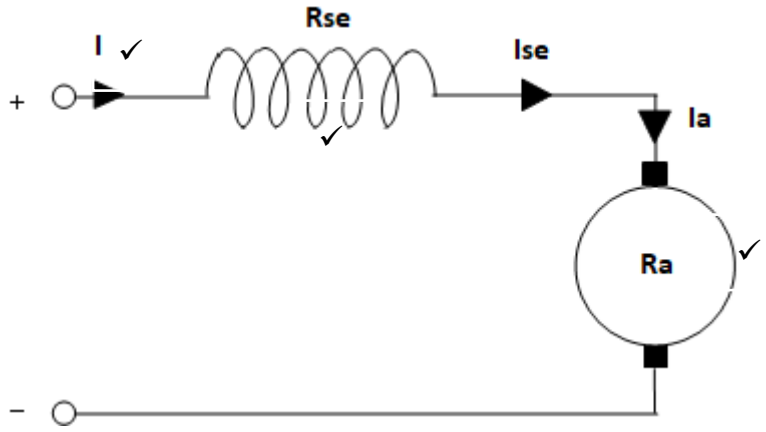

(3)

1.3
- Accommodates simultaneous maximum misalignment in all planes without imposing undue loads on adjacent bearings
- Excellent shock-absorbing properties of the flexible tyre reduces vibration and tensional oscillations
- Tyre enables torque to be transmitted from one shaft to another in either direction (3)

1.4
1.4.1 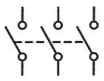

1.4.2 

1.4.3 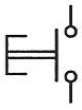

1.4.4 

1.4.5 

(5 × 1) (5)

1.5 1.5.1 $$\eta = \frac{P_{out}}{P_{in}} \times 100$$

$$P_{out} = \frac{\eta \times P_{in}}{100}$$

$$= \frac{85 \times 90\ 000}{100} \checkmark$$

$$= 76{,}5 \text{ kW} \checkmark$$

1.5.2 $\text{Total losses} = P_{in} - P_{out}$
$= 90 - 76{,}5 \checkmark$
$= 13{,}5 \text{ kW} \checkmark$

Alternative:
$\text{Total losses} = (1 - \eta) \times P_{in}$
$= (1 - 0{,}85) \times 90$
$= 13{,}5 \text{ kW}$

(2 × 2) (4)
[20]

QUESTION 2

2.1 2.1.1 True
2.1.2 False
2.1.3 True
2.1.4 True
2.1.5 False

(5 × 1) (5)

2.2 2.2.1 Leakage current is the current that that leaks to earth because of defective insulation or accidental contact of live parts by a person or an animal.

2.2.2 All current-carrying conductors of a circuit can be disconnected from their source of supply.

(2 × 2) (4)

2.3 2.3.1 Connecting to earth all metalwork not intended to carry current, a path is provided for leakage current, which can be detected and interrupted by fuses, circuit breakers and earth-leakage protection devices

2.3.2 Electrical connecting of various exposed and extraneous conductive parts within an installation to earth to prevent a difference in potential occurring between them under fault conditions

2.3.3 A new electrical installation shall not be connected to the supply unless the supply includes a protective conductor, which is the supplier's earth terminal.

(3 × 2) (6)

Copyright reserved

2.4
- Overload currents
- Fault currents
- Emergency stop
- Insulation
- Two-handed control
- Undervoltage
- Enclosures
- Restart (Any 5 × 1) (5)

[20]

QUESTION 3

3.1
3.1.1 Draw tape (fish tape)
3.1.2 Side cutter (diagonal cutter)
3.1.3 Digital multimeter
3.1.4 Utility knife (cable knife)
3.1.5 Long-nose pliers
(5 × 1) (5)

3.2
3.2.1 F
3.2.2 E
3.2.3 A
3.2.4 G
3.2.5 C
(5 × 1) (5)

3.3
- Readily accessible and mounted on or next to the motor
- Visible from the motor
- Lockable in the open position
- Housed in a lockable enclosure other than a distribution board (4)

3.4
3.4.1
a: Circuit breaker
b: Thermal overload relay
c: Emergency stop button
d: Stop button
e: Start button
f: Normally open retaining contacts
g: Contactor/Coil (7 × 1) (7)

3.4.2 It is used to protect a motor from excessive currents✓ during starting and running.✓

OR

It is used to protect the motor against the harmful effects of overcurrents. (2)

3.4.3
- When the start button is pressed,✓ current flows through the circuit and the main contactors' coil is energised.✓
- A retaining circuit (normally open contact connected in parallel with start button) will prevent the circuit from switching off when the start button is released.✓
- When the stop button is pressed the contactor will be de-energised and the motor will stop.✓ (4)

3.5
- Bearings
- Fan covers
- Terminal boxes
- Mounting feet
- Shafts
- Fan blades
- End-shields (Any 3 × 1) (3)

[30]

QUESTION 4

4.1

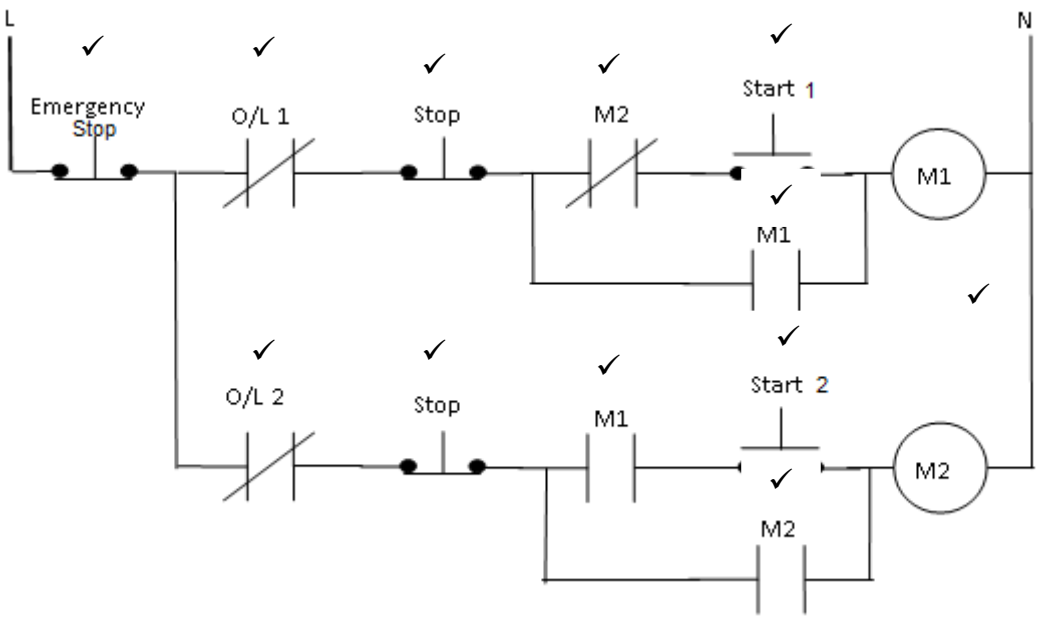

(Mark the symbols correct as long as the circuit operates according to the design brief.) (12)

4.2 4.2.1 A counter is an element that adds up input pulses.

4.2.2 An output coil is used for any output references.

4.2.3 A switch in this position allows no current through the circuit.

(3 × 1) (3)

4.3 4.3.1 electromechanical
4.3.2 normally open
4.3.3 input signal
4.3.4 AC power
4.3.5 self-test

(5 × 1) (5)
[20]

QUESTION 5

5.1
- Test dead for open circuit on one or more phases.
- Test dead for stator coil connections.
- Test dead for broken bars or rings.
- Test dead for motor being overloaded.
- Test dead for bearing seizure. (5)

5.2
- Name
- Address
- Person who can authorise work
- Person who reported fault
- Site location of faulty equipment
- Name and identification of faulty equipment
- Order/Authority to commence work (Any 5 × 1) (5)

[10]

TOTAL: 100

Copyright reserved