higher education & training

Department:
Higher Education and Training
REPUBLIC OF SOUTH AFRICA

# MARKING GUIDELINE

## NATIONAL CERTIFICATE (VOCATIONAL)

## ELECTRONICS AND DIGITAL CONCEPTS FOR ROBOTICS

**NQF LEVEL 3**

(Second paper)

**27 November 2024**

**This marking guideline consists of 4 pages.**

Copyright reserved

## QUESTION 1

1.1 Draw i/o design of a power supply

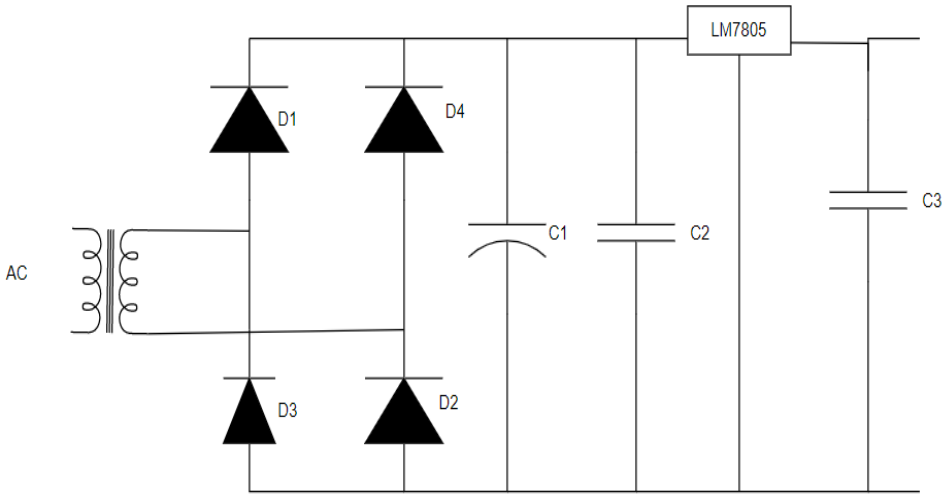


1 mark for placement of each component (9)
1 mark for correct polarity of: D1, D2, D3, D4, C1, 7805 (6)
-1 mark for each wiring mistake.
-2 marks for any short circuit created
Marker to use discretion (15)

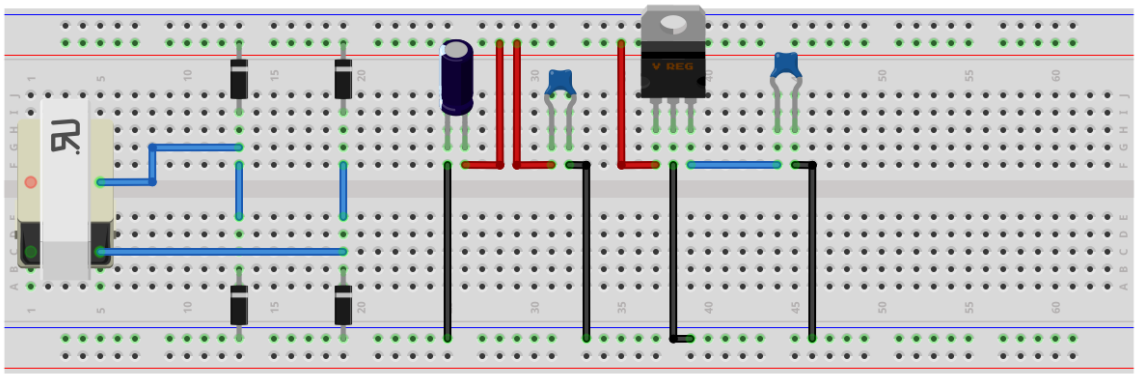

1 mark for placement of each component (9)
1 mark for correct polarity of: D1, D2, D3 D4, C1, 7805 (6)
1 mark each for any 5 correct connections (5)
-1 mark for each wiring mistake.
-2 marks for any short circuit
Marker to use discretion (20)

1.2 Bill of material ✓
4 × diodes✓
3 × capacitors✓
1 × LM7805✓
1 × transformer✓ (5)
**[40]**

## QUESTION 2

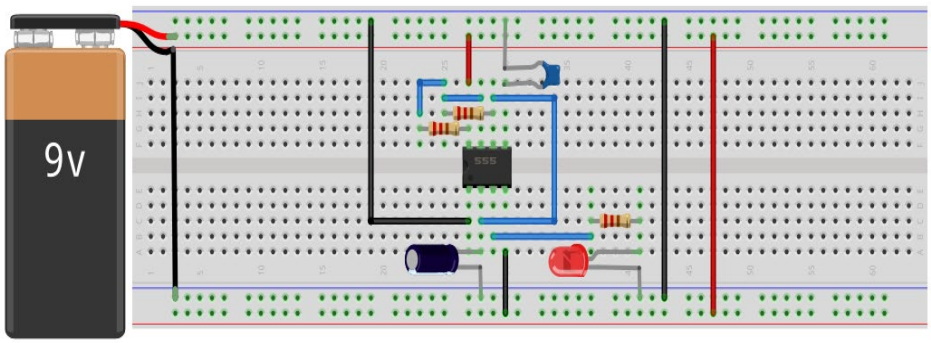


1 mark for placement of each component (8)
1 mark for correct polarity of: Battery, C1, LED, IC (4)
1 mark each for any 8 correct connections (8)
-1 mark for each wiring mistake.
-2 marks for any short circuit
Marker to use discretion **[20]**

## QUESTION 3

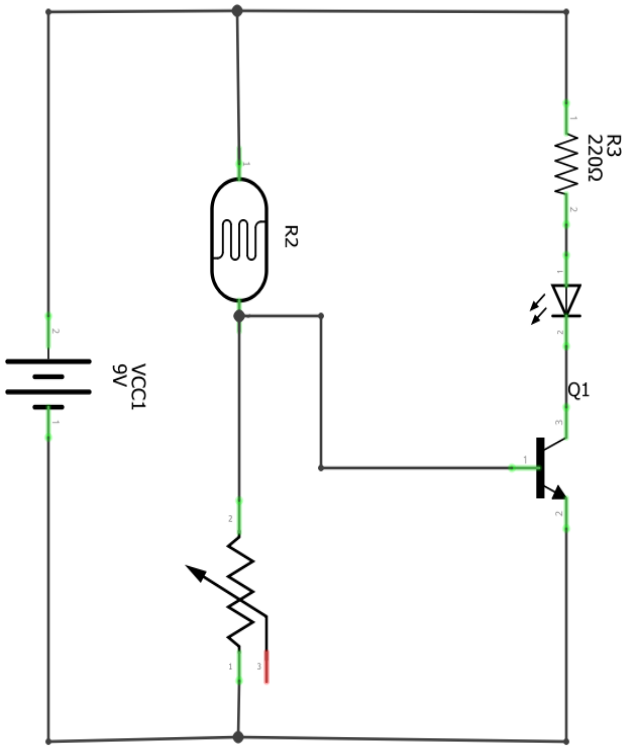


1 mark for placement of each component, observe polarity where applicable (6)
1 mark each for any 4 correct connections (4)
-1 mark for each wiring mistake.
-2 marks for any short circuit
Marker to use discretion (10)

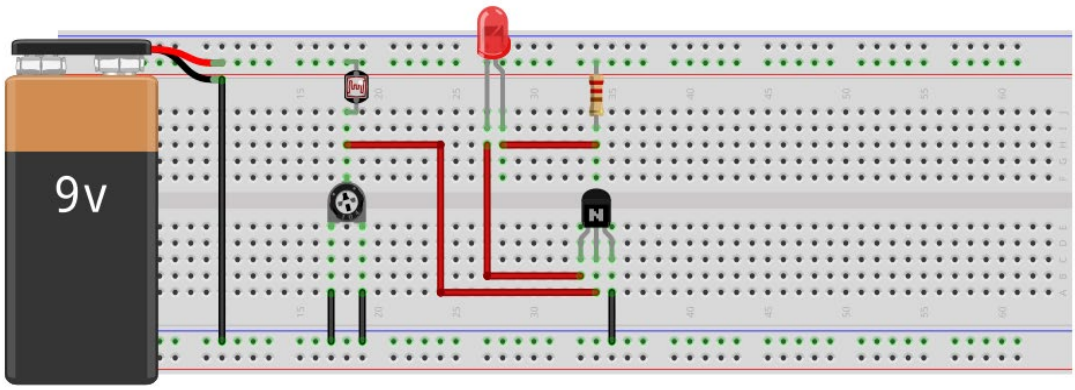


1 mark for placement of each component, observe polarity where applicable (6)
1 mark each for any 4 correct connections (4)
-1 mark for each wiring mistake.
-2 marks for any short circuit
Marker to use discretion (10)
**[20]**

**TOTAL: 80**

Copyright reserved