higher education & training

Department:
Higher Education and Training
REPUBLIC OF SOUTH AFRICA

MARKING GUIDELINE

NATIONAL CERTIFICATE (VOCATIONAL)

ELECTRONIC AND DIGITAL CONCEPTS FOR ROBOTICS
NQF LEVEL 2
(First paper)

12 November 2024

This marking guideline consists of 5 pages.

Copyright reserved

SECTION A

QUESTION 1

1.1 D
1.2 C
1.3 B
1.4 D (If the student writes A or B or C only it is still correct.)
1.5 D (If the student writes A or B or C only it is still correct.)
1.6 A
1.7 A
1.8 A
1.9 C
1.10 A

(10 × 1) **[10]**

QUESTION 2

2.1 True
2.2 False
2.3 False
2.4 False
2.5 True
2.6 True
2.7 False
2.8 False
2.9 False
2.10 True

(10 × 1) **[10]**

QUESTION 3

3.1 G
3.2 I
3.3 L
3.4 A
3.5 B
3.6 J
3.7 M
3.8 D
3.9 C
3.10 H

(10 × 1) **[10]**

TOTAL SECTION A: 30

Copyright reserved

SECTION B

QUESTION 4

4.1 4 678 000 (1)

4.2 6 700/1 000 = 6,7 G (1)

4.3 0,15 × 1 000 = 150 µ (1)

4.4 V = distance/time✓
Distance = v × time✓
= 60 × (20/60)✓
= 20 km✓✓ (5)

4.5 $\Theta = 1/2\pi r$✓
$= 8/2 \times \pi \times 2$✓✓
= 0,637 rad✓
= 229,183°✓ (5)

4.6

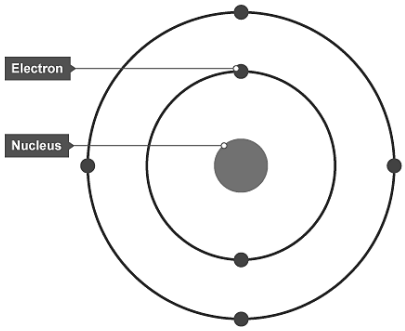

(3)

4.7 R = I/V
= 220/3,5✓
= 62,86 Ω✓ (2)

4.8 E = Pt✓
= 20 × 3 600
= 72 000 J or 72 kJ✓ (2)
[20]

QUESTION 5

5.1 5.1.1 Transformer
5.1.2 Battery
5.1.3 Relay
5.1.4 Diode
5.1.5 Capacitor
5.1.6 LED
5.1.7 Photoresistor

(7 × 1) (7)

5.2

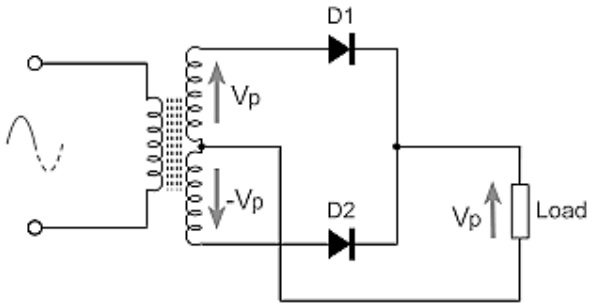

(8)
[15]

QUESTION 6

6.1 6.1.1 Measures resistance in a circuit.
6.1.2 Measures current in a circuit.
6.1.3 Measures potential difference.
6.1.4 Measures the average of the power consumed by a circuit.
6.1.5 Digital device that can imitate certain combinations of states in a digital circuit.

(5 × 1) (5)

6.2
- Wear an antistatic wrist strap.
- Check the earth connection.
- Wear shoes with rubber soles.
- Have dedicated antistatic areas.
- Keep the work area clean. (5)

[10]

QUESTION 7

7.1
- Signals are discrete and contain only distinct values (0 or 1).
- Faultfinding is much easier.
- There is less interference due to noise.
- It is represented by a square wave.
- It uses less power.
- Great volumes of information can be stored or transmitted. (6)

7.2 De Morgan's theorem is the Boolean algebra rules stating that if the sign is changed, the line above it must be broken. (2)

7.3 7.3.1

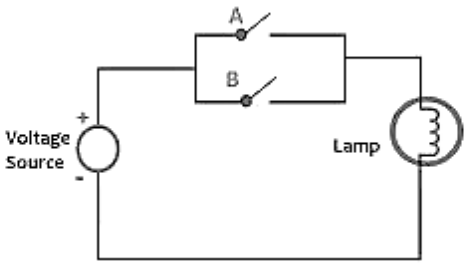

7.3.2

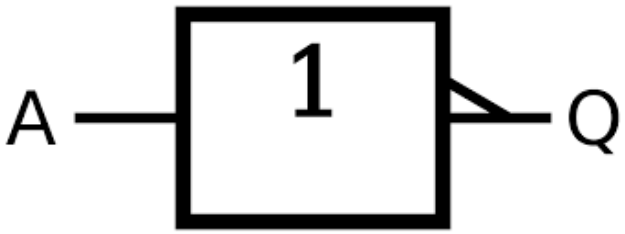

(2 × 2) (4)

7.4

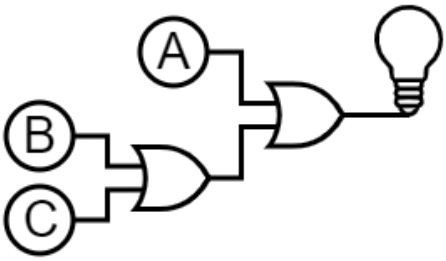

(2)
[14]

QUESTION 8

8.1 An unsafe act is an activity done by a worker that is not according to the prescribed safety standards or practices, and that can use an accident or risk in the workplace or damage equipment, while an unsafe condition exists when the working environment is not in a safe and proper condition to perform duties.
(2 + 2) (4)

8.2
- Yellow
- White
- Blue, green and black
- Orange
- Red
- Red and white stripe
- Black and white stripe
- Yellow

(Any 7 × 1) (7)
[11]

TOTAL SECTION B: 70
GRAND TOTAL: 100

Copyright reserved