higher education & training

Department:
Higher Education and Training
REPUBLIC OF SOUTH AFRICA

NATIONAL CERTIFICATE

QUANTITY SURVEYING N6

(2050026)

2 December 2022 (X-paper)
09:00–12:00

REQUIREMENTS: **Dimension paper (OE 8/12)**
Abstract paper (OE 8/10)
Billing paper (OE 8/11)

Candidates will require their own unmarked STANDARD SYSTEM OF MEASURING BUILDING WORK.

Calculators may be used.

This question paper consists of 4 pages and 5 addenda.

324Q1E2202

Copyright reserved

DEPARTMENT OF HIGHER EDUCATION AND TRAINING
REPUBLIC OF SOUTH AFRICA

NATIONAL CERTIFICATE
QUANTITY SURVEYING N6
TIME: 3 HOURS
MARKS: 100

INSTRUCTIONS AND INFORMATION

1. Answer all the questions.
2. Read all the questions carefully.
3. Number the answers according to the numbering system used in this question paper.
4. All the work for QUESTIONS 1, 2.1–2.3 and 4 must be done in the ANSWER BOOK.
5. All the work for QUESTIONS 2.4 and 3 must be done on the appropriate sheets provided.
6. All loose sheets must be numbered correctly and placed in sequence in the ANSWER BOOK.
7. Candidates must strictly apply the rules and methods as stipulated in the Standard System of Measuring Builders Work.
8. Start each section on a new page.
9. Use only a black or a blue pen.
10. Write neatly and legibly.

Copyright reserved

QUESTION 1

1.1 List THREE incidents on a building site that will result in a site instruction being issued. (3)

1.2 Who issues site instructions? (1)

1.3 List FIVE items that would appear on an agenda of for site meeting. (5)

1.4 List FIVE reasons for site visits by

1.4.1 An architect

1.4.2 A quantity surveyor

(2 × 5) (10)

1.5 Drawings are one method used to distribute information.

List FIVE types of drawings issued by an architect to ensure good communication between him-/herself self and a builder. (5)

1.6 What is a *variation order*? (1)

[25]

QUESTION 2

2.1 Give ONE word or term for each of the following descriptions. Write only the word or term next to the question number (2.1.1–2.1.5) in the ANSWER BOOK.

2.1.1 Work recorded and carried out on a daily basis.

2.1.2 Specification notes on the front page of each trade in the bills of quantities.

2.1.3 Changes to the original contract.

2.1.4 Work carried out in addition to the original contract.

2.1.5 An amount of money allowed on the final summary page of a bill of quantities to make provision for unforeseen work.

(5 × 1) (5)

2.2 Spot items refers to items of existing buildings that require alteration and repair.

List any FIVE such items. (5)

Copyright reserved

2.3 ADDENDUM A (attached) shows the plan and sectional view of a reinforced concrete structure. ADDENDUM B (attached) shows the measurement of this structure. Draw up a bill of quantities for the concrete formwork and reinforcement trade. Remove ADDENDUM B from the question paper, enter your examination number and place the addendum in the ANSWER BOOK.

2.3.1 Do the squaring on ADDENDUM B and hand the addendum in with your ANSWER BOOK. (3)

2.3.2 Do the abstracting. (5)

2.3.3 Bill all the items. (7)

[25]

QUESTION 3

ADDENDUM C (attached) shows a section and a schedule of augured, reinforced concrete piles.
ADDENDUM D and E (attached) show the measurements of these piles.

A variation order was issued before any of the measured work was carried out. The variation order shows that the total of pile B should be increased from 5 no to 7 no.

3.1 Omissions (13)

3.2 Additions (12)

[25]

QUESTION 4

4.1 Explain briefly how bulking occurs in sand. (3)

4.2 Estimate the number of bricks required to build a solid brick wall of 220 mm thick, 10 metres long and 3 metres high. Allow an additional 4 bricks for wastage. (7)

4.3 Calculate the total square area of mortar required to build the brick wall in QUESTION 4.2. (6)

4.4 4.4.1 Calculate the total cost of the brick wall in QUESTION 4.2.
Use the labour and material rate of R322,00/m².
Allow 30% for profit and 15% for value added tax. (6)

4.4.2 Calculate the square area rate of this wall. (3)

[25]

TOTAL: 100

Copyright reserved

ADDENDUM A

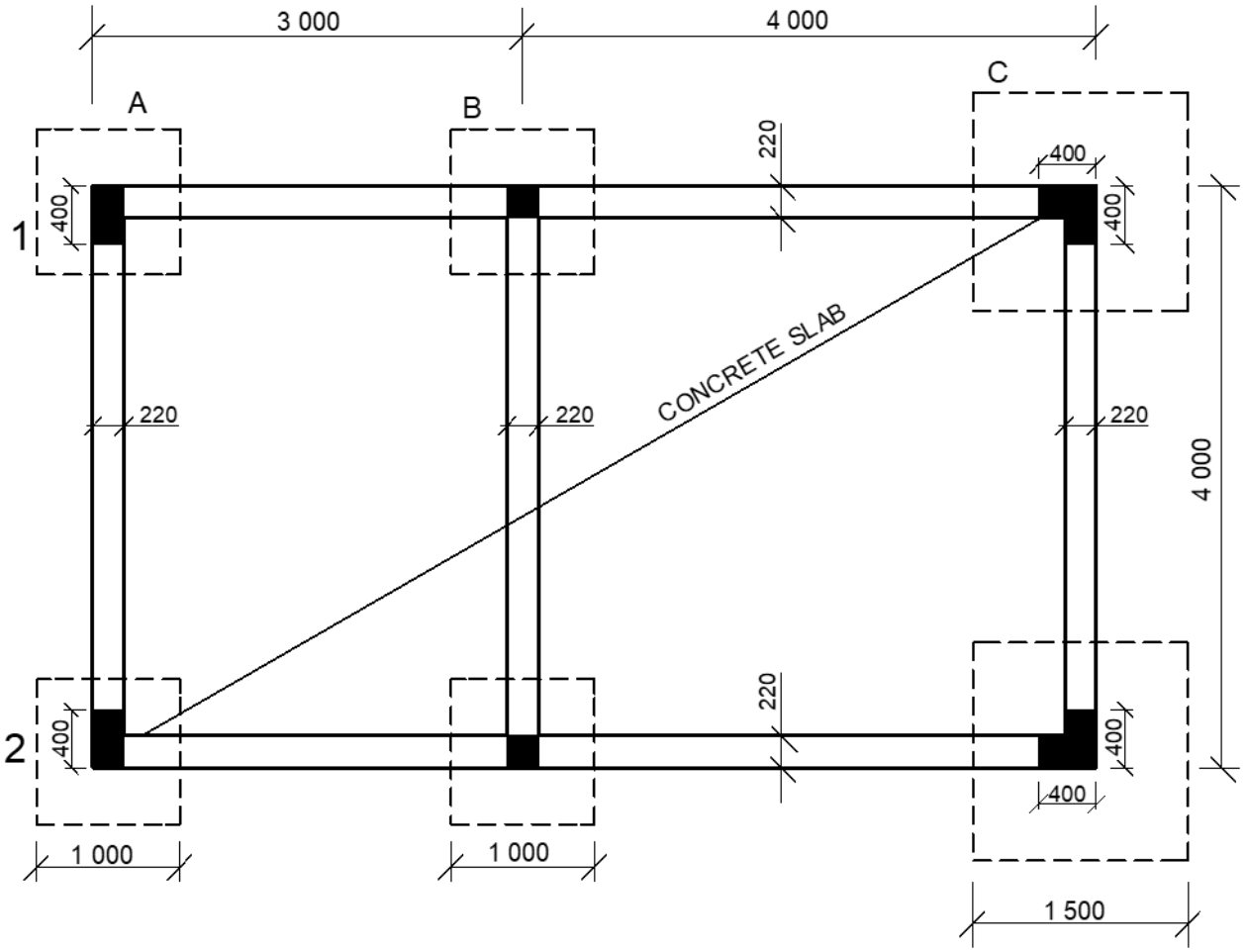

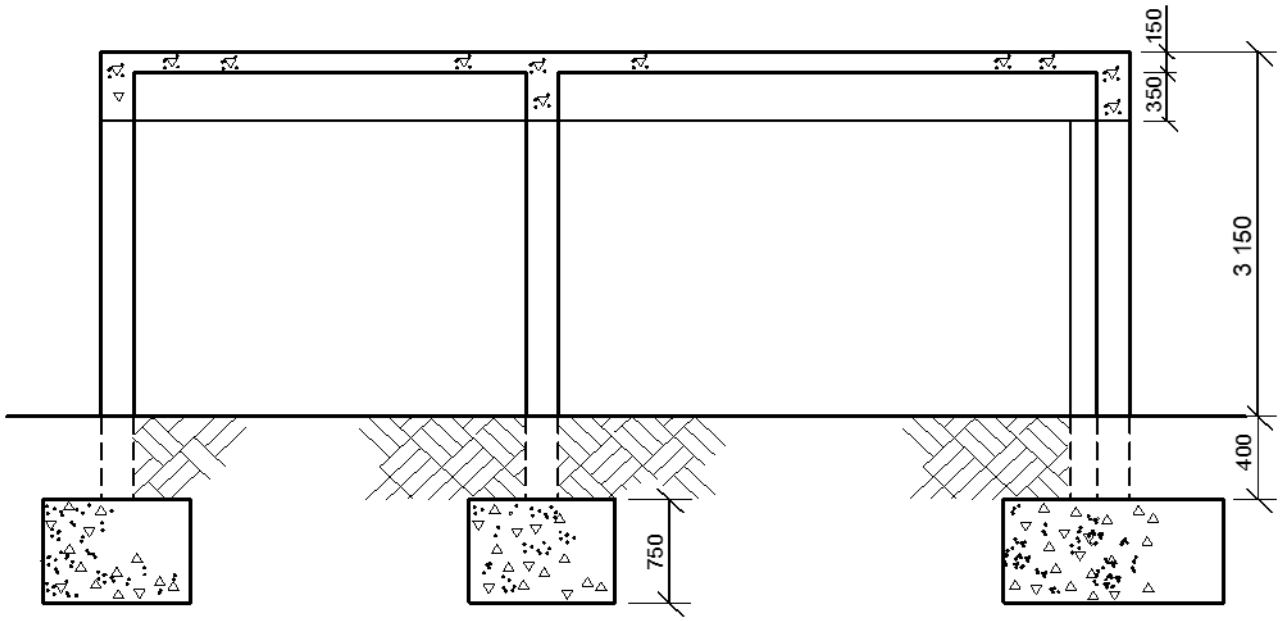

Copyright reserved

ADDENDUM B **EXAMINATION NUMBER:**

2							
	0,40		*25 Mpa reinf. Conc. in cols.*		21,12		*25 Mpa reinf. Conc. in bms.*
	0,22				0,22		
2	3,05		*3,150 + 0,400 = 3,550*		0,35		*2 × 7,000 = 14,000*
	0,22		*Less (0,350 +0,150)*		3,56		*2 × 4,000 = 8,000*
	0,22		*= 3,050 m*		0,22		*22,000*
2	3,05				0,35		*Less 4 × 0,220 0,880*
	0,58						*21,120 m*
	0,22						
	3,05						*4,000 – 2/0220 = 3,560 m*
2							
	1,24		*Frmwrk. To sides of cols.*				
2	3,05				21,12		*Frmwrk. to soffits of bms.*
	0,88		*2/0,400 + 2/0,220 = 1,240 m*		0,22		
	3,05				3,56		
			4/0,220 = 0,880 m		0,22		*&*
2							
	1,60						*Ddt.*
	3,05		*Ditto, but to L-shape cols.*				*Frmwrk. to soffits of slab a.b.*
			4/ 0,400 = 1,600 m				
	7,00						
	4,00		*25 Mpa reinf. Conc. in slab incl.s.o. & c. hor. top surf.*		22,00		*Frmwrk. to sides of bms.*
	0,15				0,15		
			3,000 + 4,000 = 7,000 m		21,12		
					0,35		
	7,00				3,56		
	4,00				0,35		
			Frmwrk. to hor. soffits of slab Exce.1,5 m n.e. 3,5 m high.				

Copyright reserved

ADDENDUM C

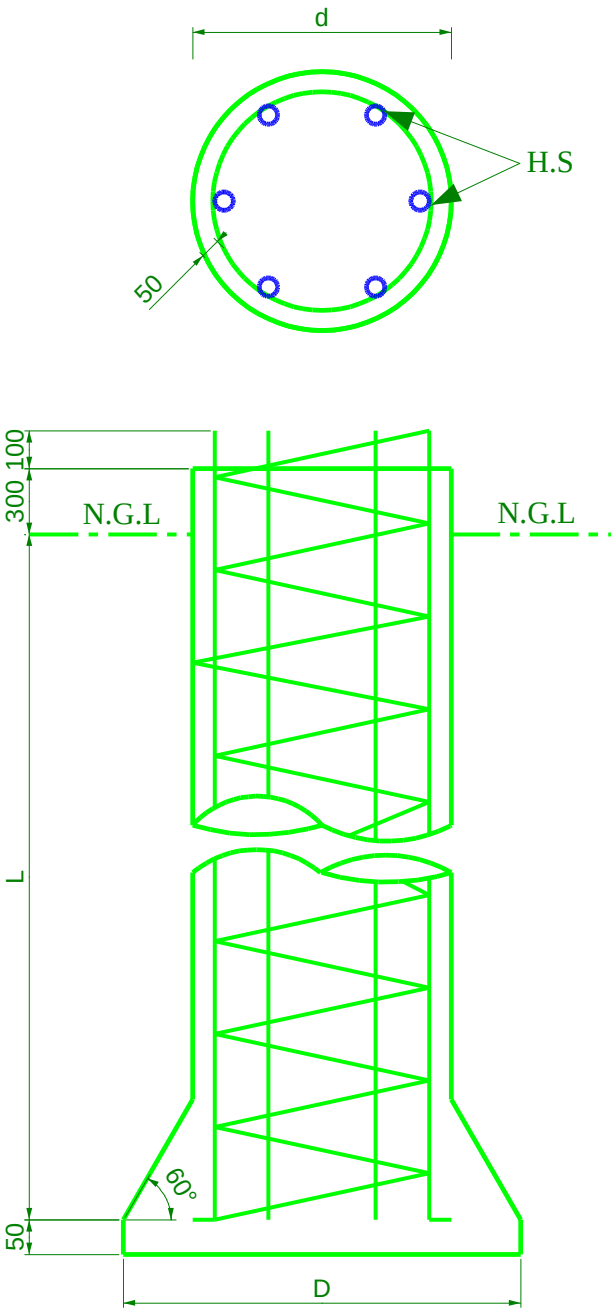

VERW REF	AANTAL NUMBER	d	D	L	HS dia.	HS LENGTE LENGTH
A	4	450	755	19.50	12	20.00
B	5	610	970	24.00	16	24.00

Copyright reserved

ADDENDUM D

	Item		*Allow to establish plant on site.*	4	4,50		*Ditto, but exce. 15 n.e. 20 m.*
			&	5	5,00		*Pile A*
			Testing plant on site.				*Pile B*
							19,500 – 15,000 = 4,500
			Setting up plant at pile positions				
	9		*4+5+ = 9 No.*	5	4,00		*Ditto, but exce. 20 n.e. 25 m.*
4							*Pile B*
6							*24,000 – 20,000 = 4,000*
	20,00		*12mm Dia. h.s. reinf. Pile A*				
					9		*E.o. drilling for under-reaming for piles 450 – 970 mm dia. Pile A,B,.*
5							
6							
	24,00		*16 mm Dia. h.s. reinf. Pile B.*	4	19,80		*25 Mpa reinf. conc. in 450mm dia. pile. Pile A.*
							19,500 + 0,300 = 19,800 m
9			*Aug. drill 450 – 710 mm dia. in firm grnd. n.e 10m. Pile A,B,*				
	10,00			5	24,30		*Ditto, but 610mm dia. pile. Pile B.*
9							*24,000 + 0,300 = 24,300m*
	5,00		*Ditto, but exce. 10 n.e. 15 m. Pile A,B,*				
			(1)				*(2)*

ADDENDUM E

	4		*Add. Conc. in enlarged bulb 450 – 755 mm. Pile A.*				
	5		*Ditto, but 610 – 970 mm Pile B,*				
4 / *5*	*0,45* *0,45* *19,50* *0,61* *0,61* *24,00*		*E.o. drilling for c.a.* *(Cube × 0,25 × 3,143 = M³)*				
			(3)				

Copyright reserved