higher education & training

Department:
Higher Education and Training
REPUBLIC OF SOUTH AFRICA

MARKING GUIDELINE

NATIONAL CERTIFICATE

COMMUNICATION-ELECTRONICS N6

25 November 2022

This marking guideline consists of 11 pages.

Copyright reserved

QUESTION 1

1.1 (a) $S^2 = \frac{R_1}{R_2}$

$= \frac{600}{125}$

$= \xrightarrow{2,191}$ ✓

$40 = 20\log N$

$\log N = 2$

$N = \xrightarrow{200}$ ✓

(b) $R_A = \frac{R\,(N^2 - 1)}{N^2\ 2NS + 1}$

$= \frac{600\ (10\ 00 - 1)}{10\ 00 - 2 \times 100 \times 2,191 + 1}$ ✓

$= \xrightarrow{627,5\ \Omega}$ ✓

(c) $R_B = \sqrt{\frac{R_1 R_2}{2}}$

$= \sqrt{\frac{600 \times 125}{2}} \left(\frac{100^2 - 1}{100}\right)$ √✓

= 13 692 Ω ✓

(d) $R_C = \frac{R_{2(N^2-1)}}{(N^2 - \frac{2N}{5} + 1)}$

$R_c = \frac{125(100^2 - 1)}{(100^2 - \frac{2 \times 100}{2,191} + 1)}$ √

$= \xrightarrow{126\ \Omega}$ ✓

(e)

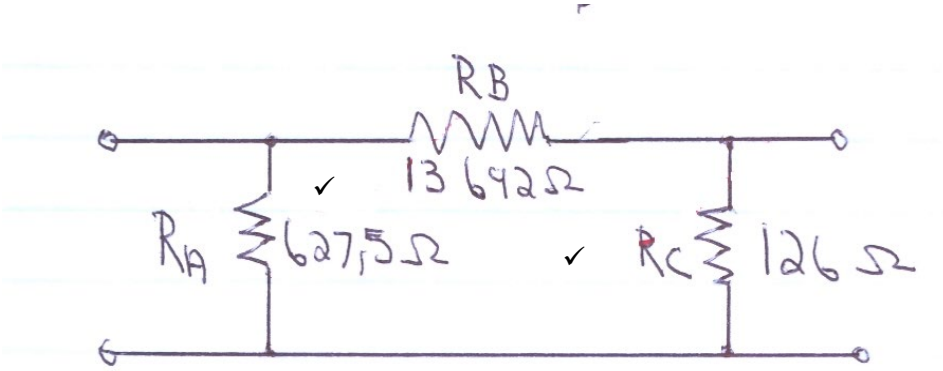

(10)

1.2

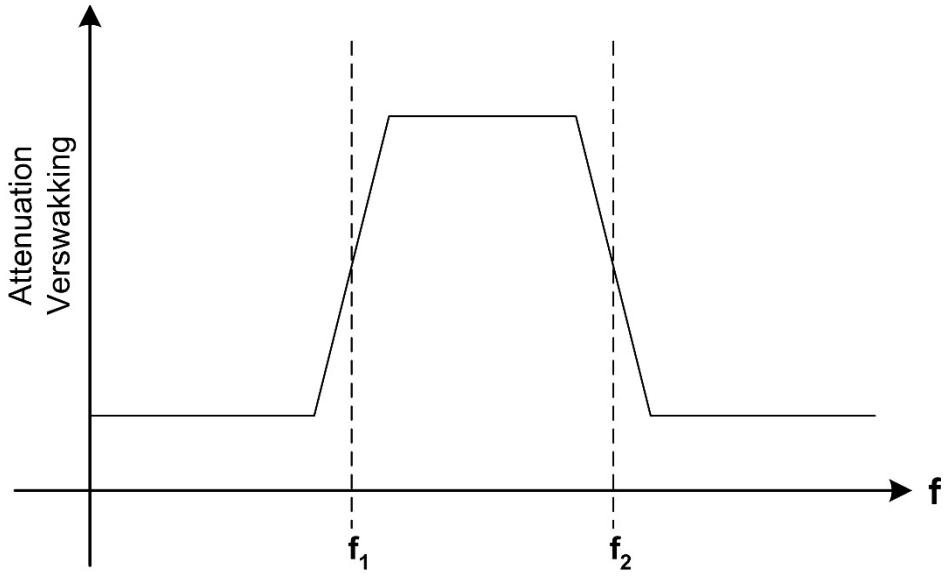

(2)

1.3 1.3.1 Design and make use of m-derived sections
1.3.2 Design and make use of half-sections

(2 × 1) (2)

1.4 1.4.1 Input
1.4.2 Low-pass

(2 × 1) (2)

1.5 Shunt C = m.C m = 0,6

$$\therefore C = \frac{\text{Shunt C}}{m}$$

$$= \frac{30 \times 10^{-9}}{0,6}$$

= 50 nF✓✓

$$C = \frac{1}{\pi . Z_o . f_c}$$

$$\therefore f_C = \frac{1}{\pi . Z_o . C}$$

$$= \frac{1}{3,142 \times 600 \times 50 \times 10^{-9}}$$

= 10,609 kHz✓✓ (4)

[20]

QUESTION 2

2.1
- The size of the conductors
- The spacing of the conductors
- The dielectric constant of the insulator (3)

2.2 2.2.1

$$Zo = \sqrt{\frac{L}{C}}$$

$$L = Zo^2C$$
$$= 75^2 \times 64 \times 10^{-12}\surd$$

$$= 3{,}6 \times 10^{-7}\surd$$

$$= \xrightarrow{0{,}36uH/m}\surd\checkmark$$

$$Zo = \frac{138}{\sqrt{K}}\ log\ \frac{D}{d}$$

$$\log\frac{D}{d} = \frac{Zo}{138/\sqrt{K}}\checkmark$$

$$= \frac{75}{138/\sqrt{2{,}23}}\surd$$

$$= 0{,}81\ \checkmark\checkmark$$ (8)

2.2.2 $$D = d \times antilog\ 0{,}81$$

$$= 0{,}584 \times 6.457\ \checkmark$$

$$= \xrightarrow{3{,}77\ mm}\surd$$ (2)

2.3 $Z_A = \sqrt{R_1(R_1 - R_2)}$

$= \sqrt{400(400 - 280)}$

$= 219{,}09\ \Omega$✓✓

$Z_B = \sqrt{\frac{R_1.R_2^2}{R_1 - R_2}}$

$= \sqrt{\frac{400 \times 280^2}{(400 - 280)}}$

$= 511{,}208\ \Omega$✓✓

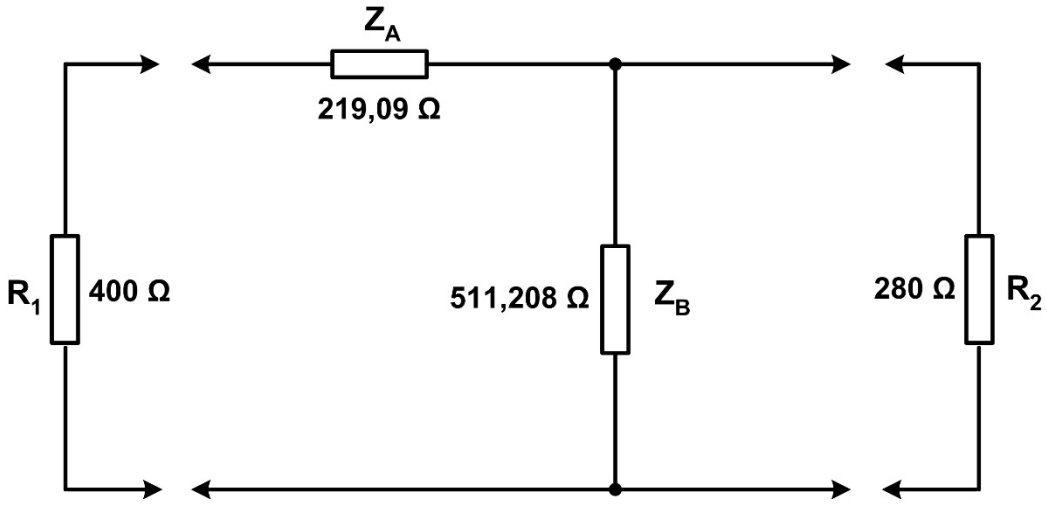

(6)

2.4 True (1)

[20]

QUESTION 3

3.1 3.1.1 $R + j.\omega.L = 75 + j900 \times 2,5 \times 10^{-3}$

$= 75 + j2,25$

$= 75,034\angle \mathbf{1,72^0}$ ✓

$G + j.\omega.C = 50 \times 10^{-6} + j900 \times 0,6 \times 10^{-12}$

$= 50 \times 10^{-6} + j540 \times 10^{-12}$

$= \mathbf{50 \times 10^{-6}\angle\left(618,8 \times 10^{-6}\right)^0}$ ✓

$\gamma = \sqrt{(R + j.\omega.L)(G + j.\omega.C)}$

$= \sqrt{\left(75,034\angle 1,72^0\right)\left(50 \times 10^{-6}\angle\left(618,8 \times 10^{-6}\right)^0\right)}$

$= 61,251 \times 10^{-3}\angle 0,86^0$

$= 61,244 \times 10^{-3} + j919,333 \times 10^{-6}$✓

$\gamma = \alpha + j\beta$

$\gamma = \frac{2.\pi}{\beta}$

$= \frac{2 \times 3,142}{919,333 \times 10^{-6}}$ ✓

$= 6,835$ km✓✓ (6)

3.1.2 $v = \frac{\omega}{\beta}$

$= \frac{900}{919,333 \times 10^{-6}}$

$= 978,971$ km/s✓✓ (2)

3.2 $Z_O = \sqrt{\frac{R + j\omega L}{G + j\omega C}}$

$= \sqrt{\frac{75,034\angle 1,72^0}{50 \times 10^{-6}\angle\left(618,8 \times 10^{-6}\right)^0}}$

$= 1225,0220,86^{\ 0}$ ✓✓ (2)

3.3 Since the angle in the impedance is zero, it means that the line is purely resistive, that no distortion will occur and that LG = CR. (3)

3.4 SWR is the ratio of maximum voltage to minimum voltage along a transmission line.✓✓

It is a measure of mismatch between the load and the line.✓ (3)

3.4 Make use of a stub constructed as shown below:

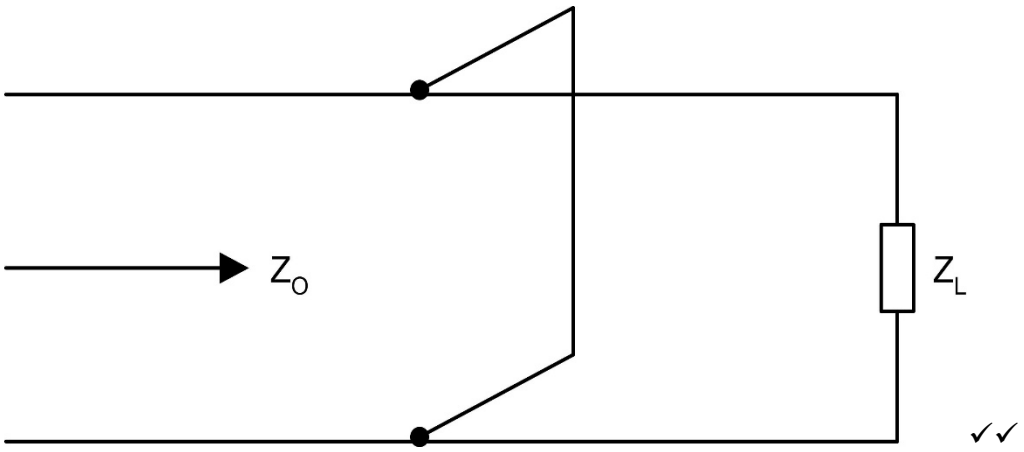

✓✓

The stub is a short piece of wire that is short-circuited across the transmission line.✓✓ (4)

[20]

QUESTION 4

4.1 4.1.1 False
4.1.2 False
4.1.3 True
4.1.4 True

(4 × 1) (4)

4.2

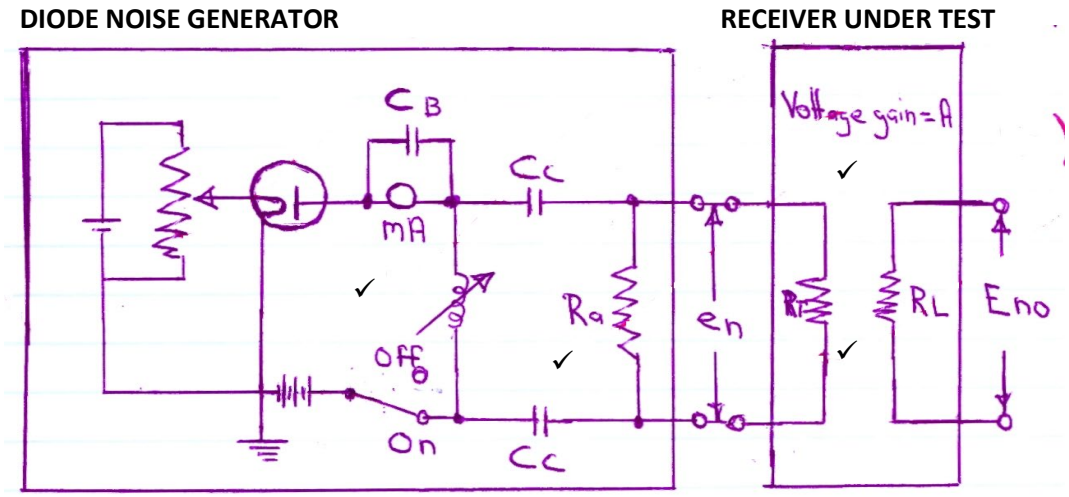

(5)

4.3 4.3.1

$$R_{eq} = R_A + \frac{R_B}{A_1^2} + \frac{R_c}{A_1^2 \cdot A_2^2}$$

$$R_A = R_{1(IN)} + R_{1(eq)}$$

$$= 9 \times 10^3 + 12 \times 10^3$$

$$= 21\ k\Omega ✓✓$$

$R_C = R_{2(OUT)}$

$= 25\ M\Omega$

$$R_B = \frac{R_{1(OUT)} \cdot R_{2(IN)}}{R_{1(OUT)} + R_{2(IN)}} + R_{2(eq)}$$

$$= \frac{21\times10^3 \times 27\times10^3}{\left(21\times10^3\right) + \left(27\times10^3\right)} + 18\times10^3$$

$$= 29{,}813\ k\Omega ✓✓$$

$$\therefore R_{eq} = R_A + \frac{R_B}{A_1^2} + \frac{R_c}{A_1^2 \cdot A_2^2}$$

$$= 21\times10^3 + \frac{29{,}813\times10^3}{15^2} + \frac{25\times10^6}{15^2 \times 30^2}$$

$$= 21{,}256\ k\Omega ✓✓$$

(6)

4.3.2 $E_n = \sqrt{4.K.T.\Delta f.R}$

$= \sqrt{4 \times 1{,}38\times10^{-23} \times 297 \times 10\times10^{6} \times 21{,}256\times10^{3}}$

$= 59{,}032\ \mu V$✓✓ (2)

4.4 $En = \sqrt{4.K.T.\Delta F.R}$

$\therefore R = \dfrac{En^2}{4.K.T.\Delta F}$

$= \dfrac{\left(18\times10^{-6}\right)^2}{4\times1{,}38\times10^{-23}\times298\times30\times10^{3}}$ ✓

= 656,551 kΩ✓✓ (3)
[20]

QUESTION 5

5.1

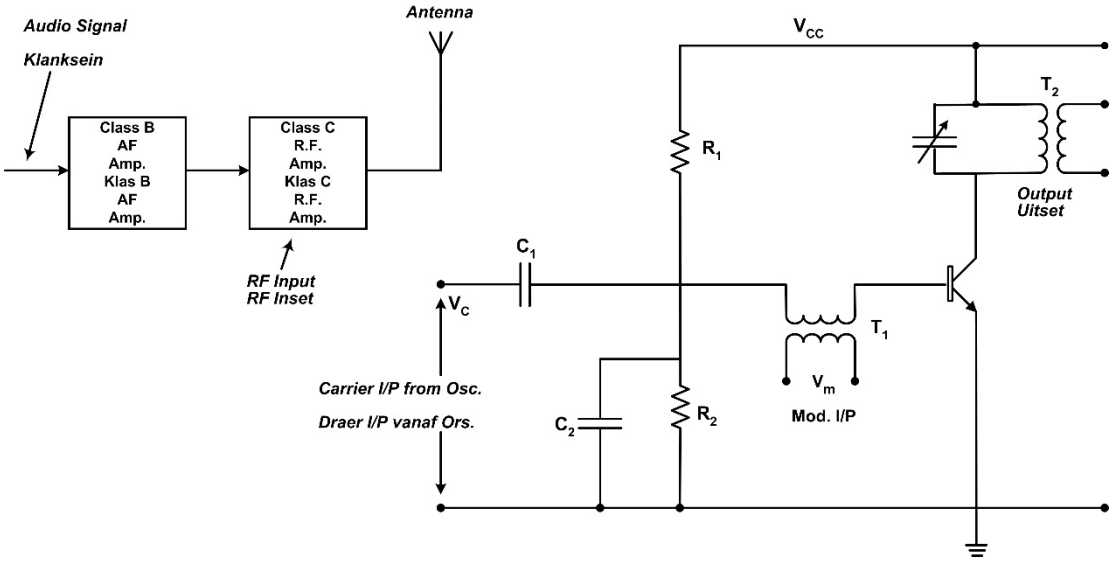

(7)

5.2 $dB = 10 \log \frac{S}{N}$

$\therefore \frac{S}{N} = \text{antilog} \frac{dB}{10}$

$= \text{antilog} \frac{15}{10}$

$= 31,623$✓✓

$c = \Delta f \times \log_2 \left(1 + \frac{S}{N}\right)$

$\therefore \Delta f = \frac{c}{\log_2 \left(1 + \frac{S}{N}\right)}$

$= \frac{2000000}{\log_2 (1 + 31,623)}$

$= \frac{2000000}{\frac{\log 32,623}{\log 2}}$ ✓

$= 397,787$ kHz✓✓ (5)

5.3 $G_t = G_r = \text{antilog}\ \frac{dB}{10}$

$= \text{antilog}\frac{20}{10}$

$= 100$✓

Path loss $= 2 \times 300 \times 0{,}005$

$= 3$ dB✓

$\therefore$ dB $=$ 10 log Path loss

$\therefore$ Path loss $= \text{antilog}\ \frac{3}{10}$

$= 2$✓

$\lambda = \frac{c}{f}$

$= \frac{3 \times 10^8}{1{,}5 \times 10^9}$

$= 0{,}2$ m✓

$\therefore P_t = \frac{(4\pi)^3 \ . d^4 \ . P_r}{G_t . G_r . Q . \lambda^2} \times$ Path loss

$= \frac{(4 \times 3{,}142)^3 \times \left(300 \times 10^3\right)^4 \times 0{,}9 \times 10^{-12}}{100 \times 100 \times 36 \times 0{,}2^2} \times 2$✓

$=$ 2,01 GW✓✓✓ (8)

[20]

TOTAL: 100

Copyright reserved