higher education & training

Department:
Higher Education and Training
REPUBLIC OF SOUTH AFRICA

NATIONAL CERTIFICATE

BUILDING AND STRUCTURAL CONSTRUCTION N6

(8060026)

18 November 2022 (X-paper)
09:00–13:00

REQUIREMENTS: BOE 8/6 HOT ROLLED Structural Steel Sections (Red Book)

OPEN-BOOK EXAMINATION

Candidates may use their own personal notes and textbooks.

This question paper consists of 6 pages, 2 diagram sheets and 3 schedules.

076Q1E2218

Copyright reserved

DEPARTMENT OF HIGHER EDUCATION AND TRAINING
REPUBLIC OF SOUTH AFRICA

NATIONAL CERTIFICATE
BUILDING AND STRUCTURAL CONSTRUCTION N6
TIME: 4 HOURS
MARKS: 100

INSTRUCTIONS AND INFORMATION

1. Answer all the questions.
2. Read all the questions carefully.
3. Number the answers according to the numbering system used in this question paper.
4. Use the attached SCHEDULES A, B and C to assist with your answers.
5. All calculations must conform to the relevant SABS/SANS Code of Practices.
6. Indicate all the relevant code/clause references.
7. Complement your answers with neat sketches.
8. Start each question on a new page.
9. Write neatly and legibly.

Copyright reserved

QUESTION 1

A rectangular reinforced concrete beam is 300 mm wide with an effective depth of 410 mm. FIGURE 1 DIAGRAM SHEET 1 (attached) shows two views of the concrete beam. The length of the beam will be simply supported over two 300 mm square reinforced concrete columns.

The clear distance between the columns is 6,0 metres.

The concrete beam must support an imposed load of 11 kN/m and a central-point load of 17 kN.

Calculate the following:

1.1 The effective span of the concrete beam.

HINT: Refer to SABS 10100-1 Clause 4.3.1.2.

1.2 The required tension reinforcement for the concrete beam.

Specifications:

- Use Grade 25 MPa concrete with high-yield tensile reinforcement.
- The calculations must include the minimum and maximum required tension reinforcement.
- Do not consider the self-weight of the reinforced concrete beam.

[20]

QUESTION 2

FIGURE 2 DIAGRAM SHEET 1 (attached) shows a compound steel beam expected to span a 9,50 metre opening. The built-up beam consists of an I-profile parallel steel beam, a channel, and a 180 mm × 12 mm thick plate.

The compound steel beam also supports an additional load of 12 kN/m.

Calculate the maximum uniformly distributed load that the steel beam can safely support. The maximum bending stress must not exceed 160 MPa.

Do not consider the self-weight of the beam.

[20]

Copyright reserved

QUESTION 3

FIGURE 3 DIAGRAM SHEET 2 (attached) shows a fully dimensioned and labelled single-flight staircase supported at both ends. The stairway will support an imposed live load of 6,5 kN/m^2.

The characteristic of the concrete is 25 MPa with high-yield tensile steel reinforcement. The density of concrete is 2 400 kg/m^3.

Calculate the following:

3.1 The sloped angle of one step.

3.2 The length of the slope of the staircase.

3.3 The maximum bending moment.

Indicate all the relevant code references. **[12]**

QUESTION 4

FIGURE 4 shows an I-section taper flange steel beam spanned over two light steel columns to form part of a roof over a passage way.

Calculate the uniformly distributed load that the steel beam will be able to support over a span of 4,75 metres.

FIGURE 4 shows the superimposed sectional view of the channel.

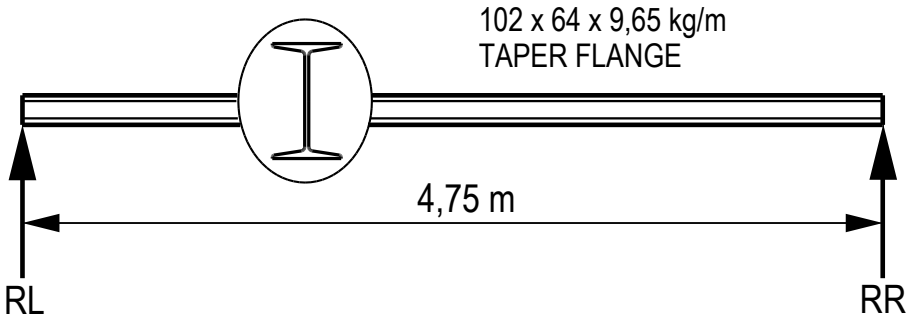

FIGURE 4

The self-weight of the steel beam must be included in the calculations. Show all calculations clearly. Use a bending stress of 155 Mpa. **[8]**

QUESTION 5

5.1 An axially loaded, round, reinforced-concrete column with a diameter of 600 mm must support a load of 200 kN.

Calculate the number and size of the vertical main bars and the size and spacing of the binders.

The characteristic strength of the concrete must be 25 MPa and that of the steel 250 MPa. (12)

5.2 Calculate the maximum length of the sides of a square and isolated pad foundation for the reinforced-concrete column in QUESTION 5.1 above.

The following loads must be included in the calculations:

Dead load:	870 kN
Imposed load:	Refer to QUESTION 5.1 P4 (ROUND COLUMN)
Mass of foundation:	85 kN
Safe bearing pressure:	220 kN/m^2

(4)
[16]

QUESTION 6.1

6.1 Calculate the safe load for the butt weld shown in FIGURE 6 DIAGRAM SHEET 2 (attached). Use the following specifications:

Plates:	112 mm × 12 mm thick
Allowable stress:	125 MPa

(3)

6.2 A flat 220 mm wide tie bar must be welded on top of a flat plate by means of two 12 mm end fillets to form a lap joint. Both the end welds have 50 mm return-side fillets.

Use a stress of 145 MPa and determine the capacity of the load on the joint. (6)
[9]

QUESTION 7

Calculate the radius of gyration (r_{xx} and r_{yy}) for the following two sectional views:

7.1 A 132 mm diameter solid circular section. (3)

7.2 A built-up I-section situated about the x-x axis, shown in FIGURE 7, consists of two 90 mm × 15 mm thick flange plates and 12 mm thick web. The overall height of the section is 120 mm.

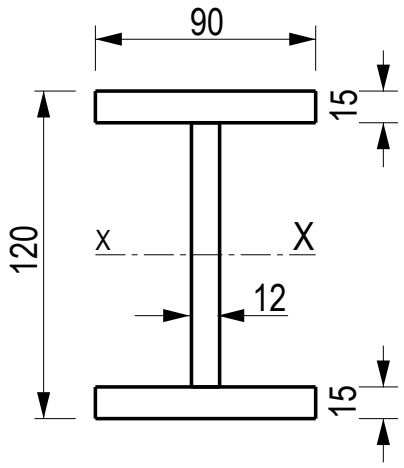

FIGURE 7 (12)

State the minimum radius of gyration for each of the given sections.
All calculations must be clearly and legibly laid out. **[15]**

TOTAL: 100

Copyright reserved

DIAGRAM SHEET 1

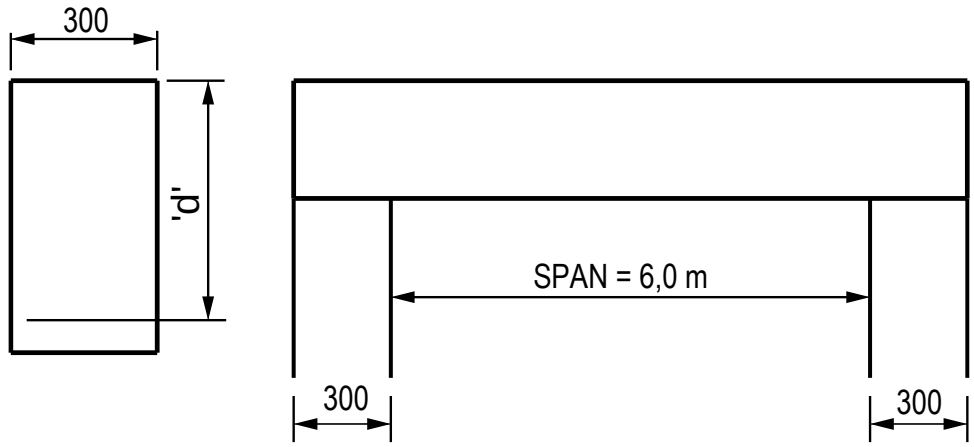

FIGURE 1

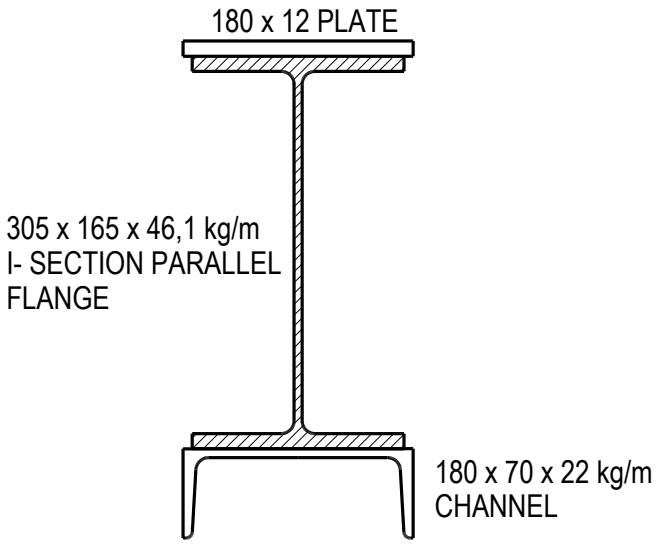

FIGURE 2

Copyright reserved

DIAGRAM SHEET 2

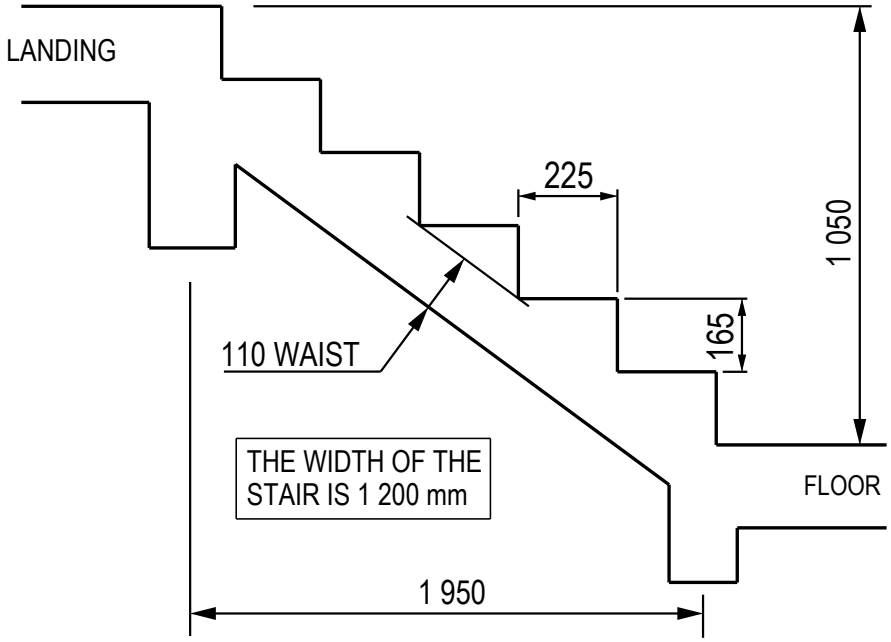

FIGURE 3

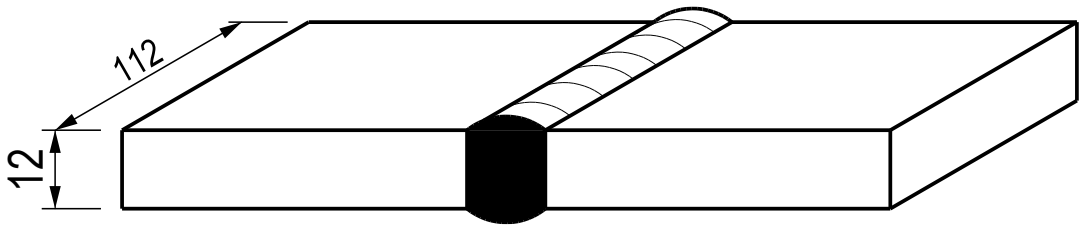

FIGURE 6

Copyright reserved

SCHEDULE A

CROSS-SECTIONAL AREA OF REINFORCEMENT RODS FOR BEAMS AND COLUMNS										
Number of rods.	Rod diameter (mm)									
	Ø6	Ø8	Ø10	Ø12	Ø16	Ø20	Ø25	Ø32	Ø40	Ø50
1	28,3	50,3	78,5	113,1	201,1	314,2	490,9	804,2	1 256,6	1 963,5
2	57	101	157	226	402	628	982	1 608	2 513	3 927
3	85	151	236	339	603	943	1 473	2 413	3 770	5 891
4	113	201	314	452	804	1 257	1 964	3 217	5 026	7 854
5	141	251	393	566	1 006	1 571	2 455	4 021	6 283	9 818
6	170	302	471	679	1 207	1 885	2 945	4 825	7 540	11 781
7	198	352	550	792	1 408	2 199	3 436	5 629	8 796	13 745
8	226	402	628	905	1 609	2 514	3 927	6 434	10 053	15 708
9	255	453	707	1 018	1 810	2 828	4 418	7 238	11 309	17 672
10	283	503	785	1 131	2 011	3 142	4 909	8 042	12 566	19 635
11	311	553	864	1 244	2 212	3 456	5 400	8 846	13 823	21 599
12	339	603	942	1 357	2 413	3 770	5 891	9 650	15 079	23 562
	Typical secondary reinforcement			Typical main reinforcement						

Copyright reserved

SCHEDULE B

CROSS-SECTIONAL AREA OF REINFORCEMENT RODS PER METRE WIDTH FOR SLABS AND STAIRCASES										
Spacing of rods. Centre to centre	Rod diameter (mm)									
	Ø6	Ø8	Ø10	Ø12	Ø16	Ø20	Ø25	Ø32	Ø40	Ø50
50	566	1 005	1 571	2 262	4 021	6 283	9 817	16 085	25 133	39 270
75	377	670	1 048	1 508	2 681	4 189	6 545	10 723	16 755	26 180
100	283	503	785	1 131	2 011	3 142	4 909	8 042	12 566	19 635
125	226	402	628	905	1 608	2 513	3 927	6 434	10 053	15 708
150	188	335	524	754	1 340	2 094	3 272	5 362	8 378	13 090
175	162	387	449	646	1 149	1 795	2 805	4 596	7 181	11 220
200	141	251	393	565	1 005	1 571	2 454	4 021	6 283	9 817
250	113	201	314	452	804	1 257	1 963	3 217	5 027	7 854
300	94	168	262	377	670	1 047	1 636	2 681	4 189	6 545
350	81	144	224	323	574	898	1 402	2 298	3 590	5 610
400	71	125	196	283	503	786	1 227	2 011	3 142	4 909
500	57	101	157	226	402	620	982	1 608	2 513	3 927
	Typical secondary reinforcement				Typical main reinforcement					

Copyright reserved

SCHEDULE C

ISOMETRIC BLACK HEXAGON BOLTS AND NUTS									
Normal size and thread diameter	DIMENSION IN MILLIMETRE								
	Pitch of thread coarse pitch series	Maximum width of head and nut		Maximum height of head		Maximum thickness of nut		Tensile stress area in mm²	Minimum distance between centres
		Across flats	Across corners	Black	Face on underside	Black	Face one Side		
M 6	1	10,00	11,5	4,375	4,25	5,375	5	20,1	15
M 8	1,25	13,00	15,0	5,875	5,74	6,875	6,5	36,6	20
M 10	1,5	17,00	19,6	7,45	7,29	8,45	8,	58,0	25
M 12	1,75	19,00	21,9	8,45	8,29	10,45	10	84,3	30
M 16	2	24,00	27,7	10,45	10,29	13,45	13	157	40
M 20	2,5	30,00	34,6	13,90	13,35	16,55	16	245	50
M 22	2,5	32,00	36,9	14,90	14,35	18,55	18	303	55
M 24	3	35,00	41,6	15,90	15,35	19,65	19	353	60
M 27	3	41,00	47,3	17,90	17,35	22,65	22	459	67,5
M 30	3,5	46,00	53,1	20,05	19,42	24,65	24	561	75
M 33	3,5	50,00	57,7	22,05	21,42	26,65	26	694	82,5
M 36	4	55,00	63,5	25,05	23,42	29,65	29	817	90
M 39	4	60,00	69,3	26,05	25,42	31,80	31	976	97,5
M 42	4,5	65,00	75,1	27,05	26,42	34,80	34	1 120	105
M 45	4,5	70,00	80,8	29,05	28,42	36,80	36	1 300	112,5
M 48	5,0	75,00	86,6	31,05	30,42	38,80	38	1 470	120
M 52	5,0	80,00	92,4	34,25	33,42	42,80	42	1 760	130
M 56	5,5	85,00	98,1	36,25	35,50	45,80	45	2 030	140

Copyright reserved