Exemplar examination paper 1

The following is an example of a final question paper.

Candidates are always reminded to carefully read the instructions before answering the questions.

Duration: 4 hours **Mark allocation: 100 marks**

Instructions and information:

1. Answer ALL the questions. You may start with any question.
2. Number the answers according to the numbering system laid out in the question paper.
3. Start each question on a new page.
4. Draw a line across the page at the end of each answer.
6. All calculations must conform to the relevant SABS / SANS Codes of Practice.
7. All the applicable codes and reference clause numbers must be indicated.
8. Complement your answers with neat sketches.
9. Use the applicable required schedules at the back of your textbook.

REQUIREMENTS: BOE 8/6 Hot-rolled structural steel sections (red book)

OPEN-BOOK EXAMINATION

Candidates may use their own personal notes and textbooks. No past question papers and marking guidelines will be allowed in the examination centre.

QUESTION 1

Figure 1 shows a compound steel beam with TWO steel plates attached to the flanges of a 356 × 171 × 56,7 kg/m H-section parallel flange steel beam with a channel section to form a compound beam. The span of the beam is 6,75 m.

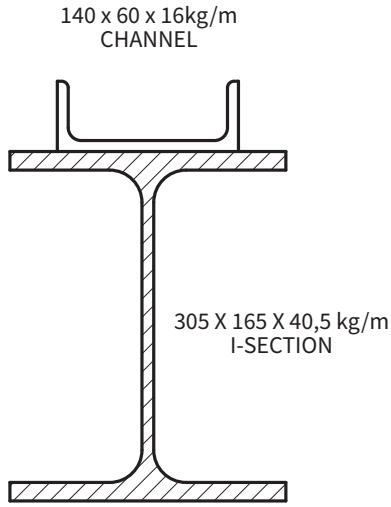

Figure 1

The steel beam must support an additional point load of 25 kN.

Include the self-weight of the compound beam and calculate the maximum uniformly distributed load that the compound beam can safely support.

Use a bending stress of 156 MPa and note that the density of structural steel is 7 860 kg/m^3. **[20]**

QUESTION 2

Figure 2 shows part of a one-directional, simply supported reinforced concrete slab with an effective span of 4,80 m. The slab will be cast over TWO 270-mm wide brick walls.

Use Grade 25 concrete with a density of 2 430 kg/m^3 then calculate the maximum uniformly distributed imposed load the slab must support.

The self-weight of the concrete slab must be included in the calculations.

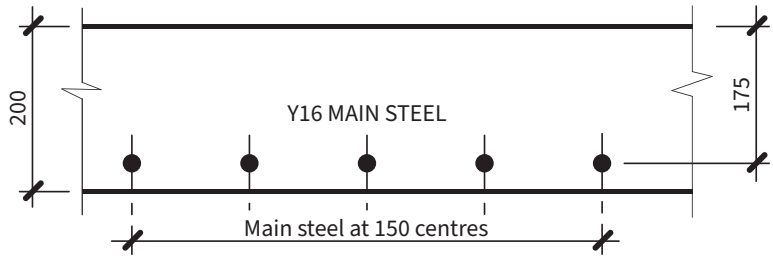

Figure 2

[12]

QUESTION 3

3.1 Figure 3 shows a rectangular reinforced concrete column. The column is reinforced with 4Y20 and 2Y16 main bars. The characteristic strength of the concrete is limited to 30 MPa.

Calculate the following:

3.1.1 The nett area of the concrete

3.1.2 The axial load the column can withstand

3.1.3 The required diameter and spacing of the binders.

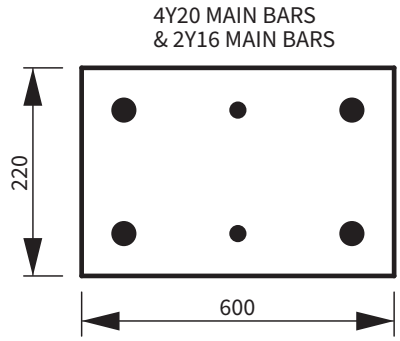

Figure 3

(9)

3.2 Calculate the minimum area of a square isolated pad foundation for the RC column mentioned in Question 3.1. The column must also resist the following loads:

Imposed load: 600 kN

Mass of foundation concrete: 85 kN

Use a safe bearing upward soil pressure of 220 kNm^2. (5)

[14]

QUESTION 4

4.1 Calculate the amount of cement required for a concrete mix with a water: cement ratio of 0,35 and 46 litres of water. (3)

4.2 Explain the characteristics of non-ferrous metals. (2)

4.3 State the difference between brass and bronze. (2)

[7]

QUESTION 5

A simply supported reinforced concrete beam has an effective span of 5,35 m. The beam is 230 mm wide and must support the following loads:

(a) A 12-kN point load in the centre of the beam

(b) A uniformly distributed load of 7 kNm.

The beam will be made up by using Grade 25 MPa concrete and mild steel reinforcement. The density of the concrete must be taken as 2 400 kg/m^3. The self-weight of the reinforced concrete beam must be taken into consideration.

Answer the following:

5.1 The effective depth of the reinforced concrete beam (3)

5.2 Determine the suitable tension reinforcement for the reinforced concrete beam (14)

5.3 Check for the minimum required main reinforcement. (1)

[18]

QUESTION 6

6.1 A 356 × 171 × 44,8 kg/m I-section steel column is used in a warehouse as part of the structure. The actual height of the column is 4,750 m. The column will, however, be effectively held in position at both ends, but not restrained against rotation. Calculate the maximum load that the column will be able to support. All the reference codes must be clearly indicated. (7)

6.2 State the degree of restraint of a compression member where the effective length is given as 0,70 L. State the code and reference. Also include a neat sketch to show the fixing symbol. (4)

[11]

QUESTION 7

Figure 4 shows TWO methods of using a 203 × 133 × 25,3 kg/m I-section parallel flange as a tension member to span a distance of 5,55 m.

7.1 Calculate the maximum uniformly distributed load (UDL) that each of the beams will be able to carry. Use a bending stress of 165 MPa. (10)

7.2 Explain why the loads of the two beams differ. (2)

7.3 Draw TWO neat drawings to show how the beams can be joined to form ONE compression member. (4)

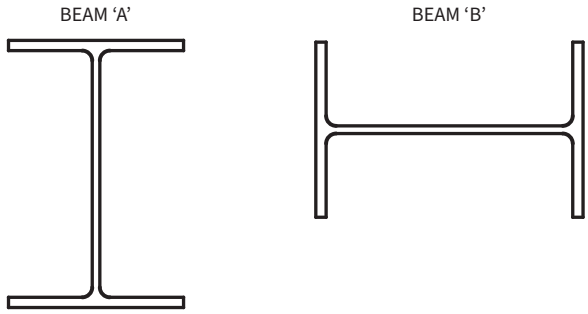

Figure 4

[16]

Total: 100 marks

Exemplar examination paper 2

The following is an example of a final question paper.

Candidates are always reminded to carefully read the instructions before answering the questions.

Duration: 4 hours **Mark allocation: 100 marks**

Instructions and information:

1. Answer ALL the questions. You may start with any question.
2. Number the answers according to the numbering system laid out in the question paper.
3. Start each question on a new page.
4. Draw a line across the page at the end of each answer.
6. All calculations must conform to the relevant SABS / SANS Codes of Practice.
7. All the applicable codes and reference clause numbers must be indicated.
8. Complement your answers with neat sketches.
9. Use the applicable required schedules at the back of your textbook.

REQUIREMENTS: BOE 8/6 Hot-rolled structural steel sections (red book)

OPEN-BOOK EXAMINATION

Candidates may use their own personal notes and textbooks. No past question papers and marking guidelines will be allowed in the examination centre.

QUESTION 1

A short, axially loaded reinforced round concrete column with a diameter of 850 mm has to support an ultimate load of 7 500 kN. Use Grade 30 concrete with high-yield tensile steel main reinforcement and a mild steel binder.

Calculate the following:

1.1 The required number and diameter of the longitudinal bars (4)

1.2 The maximum and minimum percentage of the steel reinforcement (2)

1.3 The diameter and pitch of the helical binder (4)

1.4 Draw TWO neat drawings to show the cross-sectional view and longitudinal vertical section of the column. Clearly show the positions of the main steel and THREE binders. (5)

[15]

QUESTION 2

Figure 1 shows the front view of a loaded steel roof truss.

Ignore the self-weight of the roof truss but calculate the following:

2.1 The upward forces of the reactions RR and RL (4)

2.2 The magnitude of the forces in parts 'AB', 'CD' and 'BD' (9)

2.3 Distinguish between tension and compression forces in the members.

(No marks will be awarded for the graphical solutions.) (5)

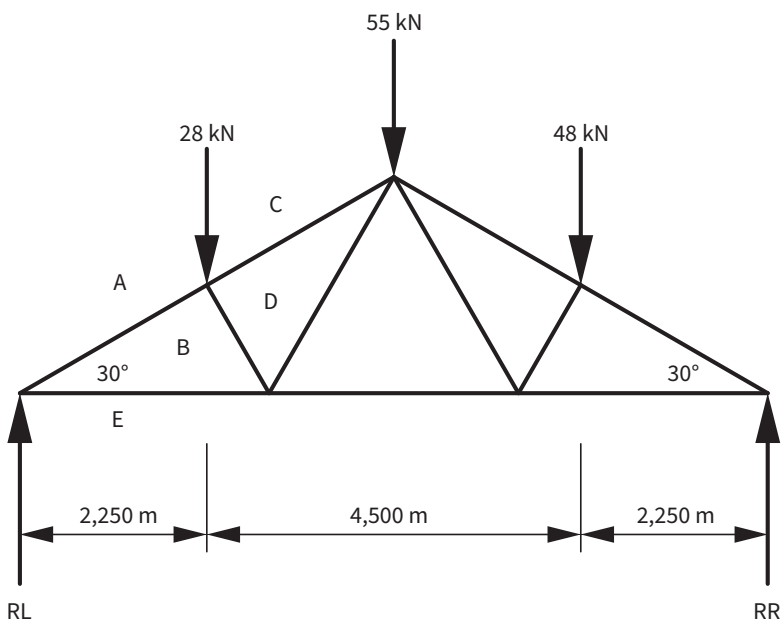

Figure 1

[18]

QUESTION 3

A simply supported reinforced concrete beam is cast over a wide opening for a roll-up metal garage door. The effective span for the opening is 9 m.

The beam supports the following loads:

(a) TWO uniformly distributed live loads of 4,475 kNm and 12,8 kNm.

(b) An 88-kN point load 3,5 m from the right-end support.

Use the following specifications:

- Grade 25 MPa concrete
- High yield tensile reinforcement

Calculate the following:

3.1. The reactions RL and RR of the beam (4)

3.2. Draw a neat sketch of the shear force diagram. (2)

3.3. Calculate and draw a neat sketch of the bending moment diagram. (4)

3.4 Calculate the value of 'K' to determine if compression reinforcement is required.

DO NOT insert any reinforcement. Ignore the self-weight of the reinforced concrete beam. (3)

[13]

QUESTION 4

A simply supported I-section steel beam supports a load of 65 kNm over an effective span of 6,35 m. The bending stress is 156 MPa.

Calculate the following:

4.1 Select a suitable parallel flange steel beam to support the given load. (5)

4..2 Add the mass of the chosen beam to the downward load and then check if the chosen steel beam is adequate to support the load as well as its own weight. (7)

[12]

QUESTION 5

A double reinforced concrete beam must be cast as a simply supported beam over a wide panoramic sliding door and window.

The following specifications are given to design the RC beam:

Width of beam:	330 mm
Effective span:	8 m
Fcu:	25 MPa
Fy:	450 MPa
Density of concrete:	2 425 kg/m^3

5.1 Calculate the following:

5.2 The effective depth of the beam (2)

5.3 The design dead load (6)
5.4 The maximum bending moment (4)
5.5 The lever arm distance (2)
5.6 The required compression reinforcement (3)
5.7 The required tension reinforcement (3)

Check for the minimum and maximum reinforcement. (2)

The self-weight of the beam must be considered in the calculations. The relevant codes and clauses must be indicated. **[22]**

QUESTION 6

1. Calculate the maximum effective span for a 457 × 191 × 89,7 kg/m structural steel beam able to carry a 375-kN point load at mid-span. The self-weight of the beam must be included in your calculations. Use a bending stress of 175 MPa. (8)
2. Figure 2 shows a tie bar (F) welded to a gusset plate by means of TWO 8-mm side fillet welds.

Use an allowable stress of 130 MPa and calculate the safe load. (5)

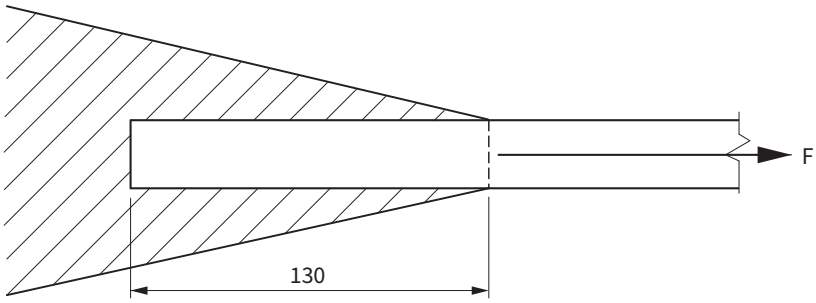

Figure 2

[13]

QUESTION 7

7.1 Name TWO of the materials used to charge up a steelmaking furnace. (2)
7.2 State the size of the concrete stone used to make concrete. (1)
7.3 Explain the effects of the water:cement ratio in a concrete mix. (2)
7.4 State the aim(s) of the water permeability test. (2)

Total: 100 marks

Exemplar examination paper 3

The following is an example of a final question paper.

Candidates are always reminded to carefully read the instructions before answering the questions.

Duration: 4 hours **Mark allocation: 100 marks**

Instructions and information:

1. Answer ALL the questions. You may start with any question.
2. Number the answers according to the numbering system laid out in the question paper.
3. Start each question on a new page.
4. Draw a line across the page at the end of each answer.
6. All calculations must conform to the relevant SABS / SANS Codes of Practice.
7. All the applicable codes and reference clause numbers must be indicated.
8. Complement your answers with neat sketches.
9. Use the applicable required schedules at the back of your textbook.

REQUIREMENTS: BOE 8/6 Hot-rolled structural steel sections (red book)

OPEN-BOOK EXAMINATION

Candidates may use their own personal notes and textbooks. No past question papers and marking guidelines will be allowed in the examination centre.

QUESTION 1

1.1 State TWO advantages of the cupola furnace. (2)

1.2 Explain how you would ensure adequate moisture content during the concrete curing process of a concrete column or wall. (2)

1 .3 Name any TWO tests that are done for concrete. (2)

[6]

QUESTION 2

Figure 1 shows a part of a strutted roof truss. The strut and tie are connected to the main rafter by means of an 8-mm thick gusset plate.

The strut and tie are single discontinuous equal-leg rolled steel angles. The Grade parts marked 'S' and 'T' are Grade 43 single discontinuous equal-leg rolled steel angles.

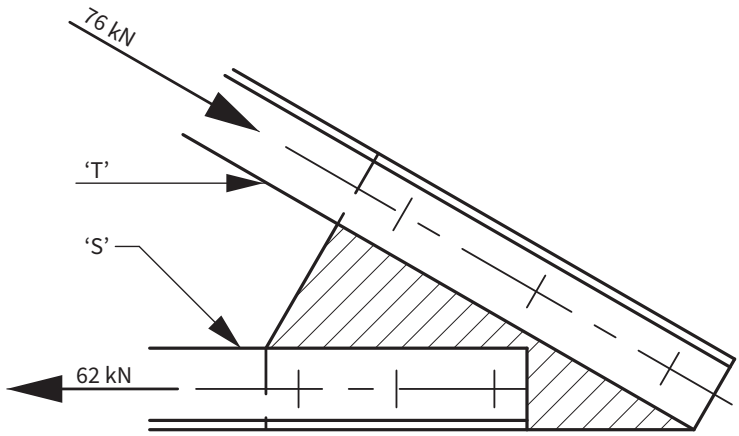

Figure 1

2.1 Select a suitable equal-leg rolled steel angle for the part marked 'T'. The tie will be bolted to the gusset plate using Grade 4,6 M16 bolts. (9)

2.2 The strut is welded to the gusset plate using an 8-mm fillet weld.
Calculate the effective length for the fillet weld. The maximum shear stress 155 MPa. (5)

[14]

QUESTION 3

Figure 2 shows a fully dimensioned T-beam with a span of 5,5 m.
Use Grade 25 concrete with high-yield tensile steel reinforcement to calculate suitable tension reinforcement for the T-beam. The beam will support a dead load of 6,5 kNm^2 and an imposed load of 7,5 kNm^2.

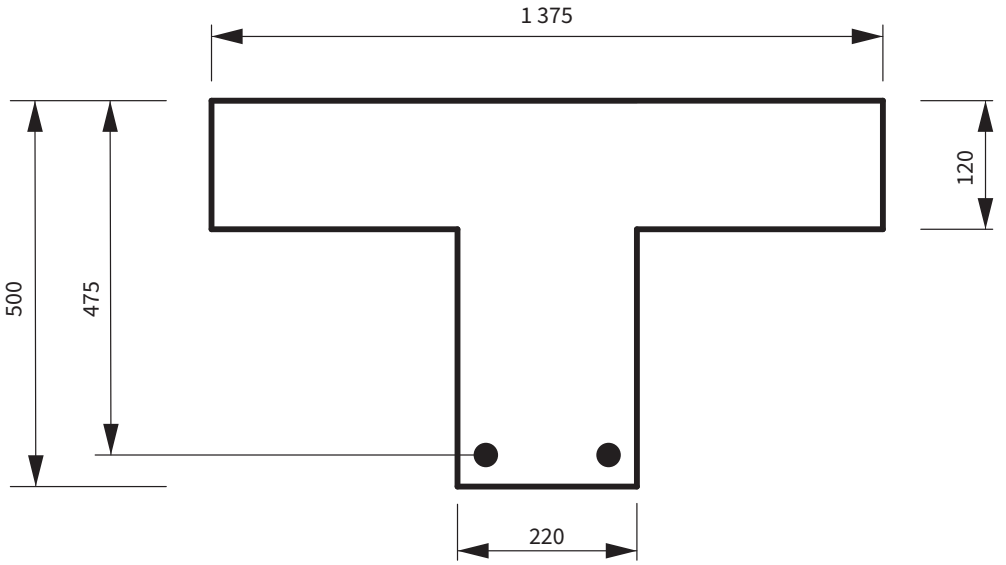

Figure 2

Your answers must include the following:

3.1 The lever arm distance (2)

3.2 The position of the neutral axis (3)

3.3 The total design load (2)

3.4 The maximum bending moment (2)

3.5 The required tension reinforcement. (4)

Use the formula: AS = m + 0,1 fcu bw d(0,45 –hf) / 0,87 fy (d-0,5hf) **[13]**

QUESTION 4

Figure 3 shows a compound steel beam with TWO steel plates attached to the flanges of a 305 × 102 × 32,8 kg/m I-parallel flanged steel beam. The steel beam will be secured over a 6,25-m wide panoramic window.

The steel beam must support an additional uniformly distributed load of 35 kNm.

Include the self-weight of the compound beam and then calculate the maximum uniformly distributed load that the steel beam can safely support.

Use a bending stress of 165 MPa and note that the density of structural steel as 7 865kg/m^3. **[20]**

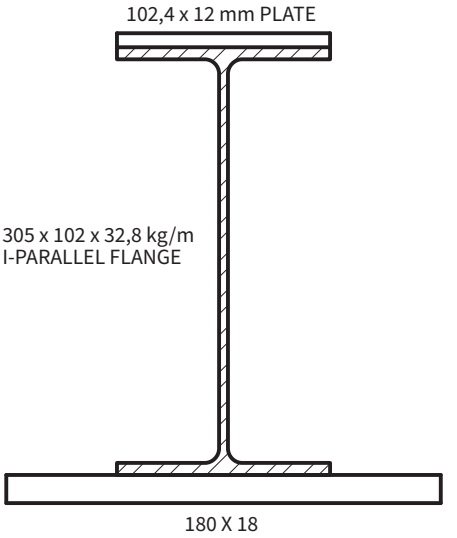

Figure 3

QUESTION 5

Figure 4 shows an eccentrically loaded connection. A load of 28 kN is subjected to the connection at a distance of 300 mm from the centre of the steel column.

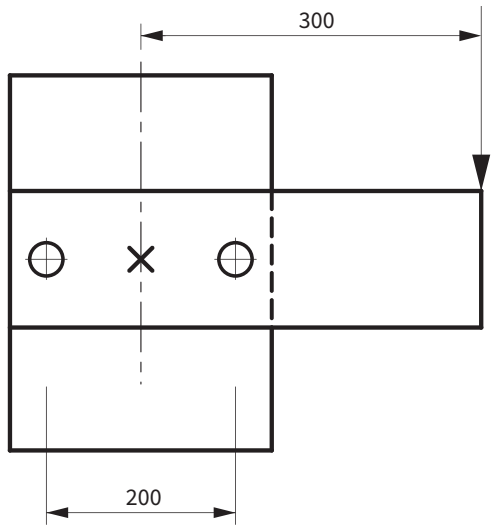

Figure 4

Calculate the diameter of the bolts required to hold the connection in place. Use a shear stress value of 105 MPa. **[11]**

QUESTION 6

A one-directional, simply supported reinforced concrete slab has an effective span of 5,25 m and supports a live load of 7,5 kNm^2. Use Grade 25 MPa concrete with mild steel reinforcement. The density of the concrete is 2 450 kg/m^3.

Calculate the suitable tension and secondary reinforcement for the given slab.

The self-weight of the slab must be, considered in the calculations. **[18]**

QUESTION 7

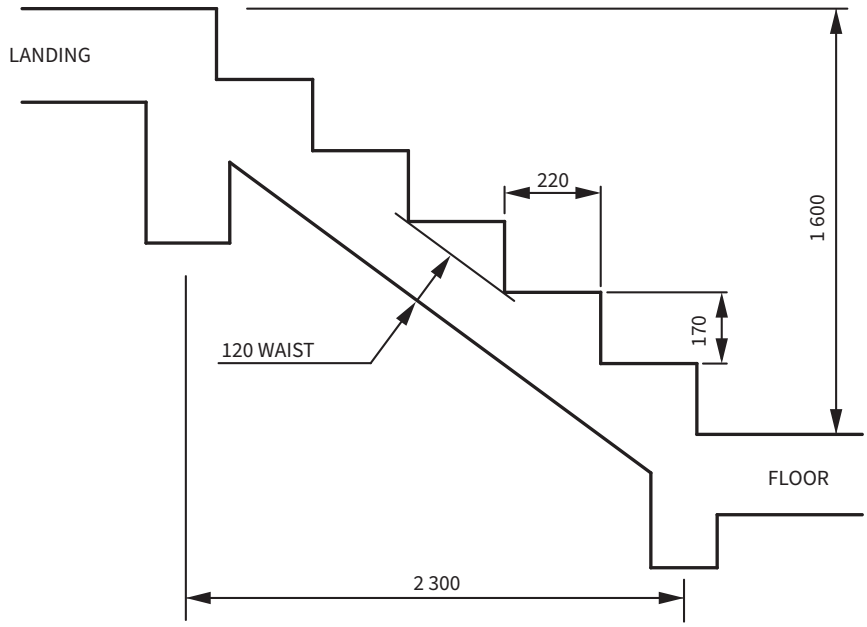

Figure 5

Calculate the suitable tension and secondary reinforcement for the reinforced concrete staircase shown in Figure 5. The staircase is supported at both ends and is subjected to a 12,5 kNm^2 imposed load. The width of the stairway is 1,15 m (1 150 mm).

The stairway is cast monolithically using Grade 20 concrete with mild steel reinforcement. The density of the concrete is 2420 kg/m^3. **[18]**

Total: 100 marks

Exemplar examination paper 1 memorandum

The following is an example of the marking guidelines for a final examination paper.

QUESTION 1

Given information:

305 × 165 × 40,5 kg/m I-section beam: $I_{xx} = 85{,}51 \times 10^{-6}\ m^4$ Area = $5{,}165 \times 10^{-3}\ m^2$ $\frac{h}{2} = \frac{303{,}8}{2} = 151{,}9$ mm	Channel: 140 mm × 60 × 16 kg/m $I_{yy} = 0{,}6249 \times 10^{-6}\ m^4$ Area = $2{,}037 \times 10^{-3}\ m^2$ Ay = 17,5 mm $T_1 = 7$ mm
Total area = $5{,}165 \times 10^{-3}\ m^2 + 2{,}037 \times 10^{-3}\ m^2$ Total area = $7{,}202 \times 10^{-3}\ m^2$	

Calculate neutral axis using area moments from bottom $7{,}202 \times 10^{-3}\ m^2 \times Y_1$ = Area beam + distance to centre $(5{,}165 \times 10^{-3}\ m^2 \times 0{,}1519) = 0{,}785 \times 10^{-3}$ $+ (2{,}037 \times 10^{-3}\ m^2 \times 0{,}3213) = 0{,}654 \times 10^{-3}$ Total $= 1{,}44 \times 10^{-3}\ m^2$ $Y_1 = \frac{1{,}44 \times 10^{-3}\ m^2}{7{,}202 \times 10^{-3}\ m^2}$ $Y_1 = 0{,}19994$ m $Y_1 = 199{,}94$ mm	303,8 + 17,5 = 321,3 mm	(4)

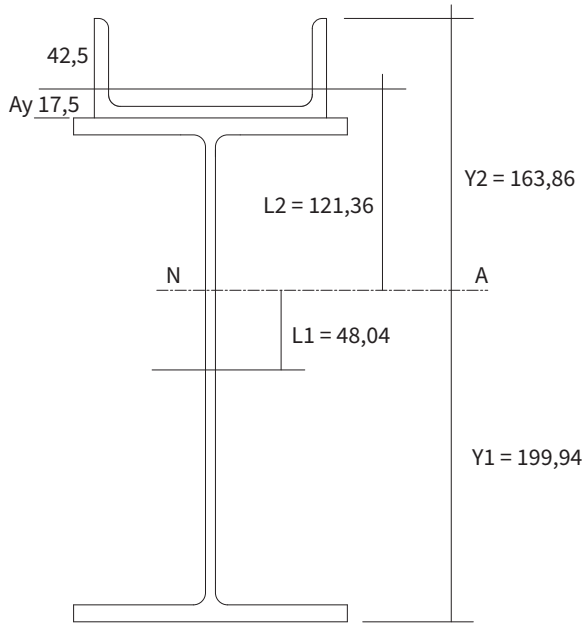

Figure A

$L_1 = 199{,}94 - 151{,}9 = 48{,}04$

$L_2 = 163{,}86 - 42{,}5 = 121{,}36$

Calculate second moment of area (I_{xx} total) $I_{xx\ tot} = (I_{xx}\ \text{Beam} + al^2) + (I_{yy}\ \text{Channel} + al^2)$ $I_{yy\ Beam} = (85{,}51 \times 10^{-6} + 5{,}165 \times 10^{-3} \times 0{,}04804^2)$ $= (85{,}51 \times 10^{-6} + 11{,}92 \times 10^{-6}) = 97{,}43 \times 10^{-6}\ m^4$ $I_{xx\ Channel} = (0{,}6249 \times 10^{-6} + 4{,}183 \times 10^{-3} \times 0{,}12136^2)$ $= (0{,}6249 \times 10^{-6} + 61{,}6 \times 10^{-6}) = 62{,}23 \times 10^{-6}\ m^4$ $I_{xx\ total} = 159{,}66 \times 10^{-6}\ m^4$		(5)
Calculate maximum bending moment (Bending stress = 158 MPa) $\frac{M}{I} = \frac{f}{y}$ where $M = \frac{f \times I}{y}$ $BM_{max} = \frac{156 \times 159{,}66 \times 10^6}{199{,}94}$ $BM_{max} = 124{,}57\ kNm$		(3)

Calculate the self-weight of the beam Beam: 40,5 kg/m × 9,81 × 10^{-3} = 0,397 kNm Channel: 16 kg/m × 9,81 × 10^{-3} = 0,157 kNm Total self-weight = 0,554 kNm		(3)
Calculate the maximum point load the beam can carry Additional 35 kNm UDL beam + channel + add load + load to support $BM = \frac{W\,l^2}{8} + \frac{W\,l^2}{8} + + \frac{W \times L}{4} + \frac{W\,x\,l^2}{8}$ $124{,}57 = \frac{0{,}397 \times 6{,}75^2}{8} + \frac{0{,}157 \times 6{,}75^2}{8} + \frac{25 \times 6{,}75}{4} + \frac{W \times 6{,}75^2}{8}$ 124,57 = 2,26 + 0,894 + 42,19 + 1,688 W $W = \frac{124{,}57 - (2{,}26 + 0{,}894 + 42{,}19)}{5{,}695}$ W = 15,85 kNm		(4) **[20]**

QUESTION 2

All references taken from SANS 10100-1 (2000).

Fcu = 25 MPa Fy = 450 MPa Span = 4,80 mm	Table 2 (4.1.5.1) Table 3 (4.1.5.1) Cl. 4.3.1.2	
Determine the area of the main steel Y16 at 150 centres: As = 1 340 mm^2		(1)
Calculate distance of lever arm (Z) $Z = d\left\{0{,}5 + \sqrt{0{,}25 - \frac{K^1}{0{,}9}}\right\}$ $Z = 175\left\{0{,}5 + \sqrt{0{,}25 - \frac{0{,}156}{0{,}9}}\right\}$ Z = 175{0,777} Z = 135,98 mm	(CL.4.3.3.4.1)	(2)
Calculate maximum moment of resistance $AS = \frac{M}{0{,}87 \times fy \times z}$ M = 0,87 × 450 × 135,98 × 1 340 M = 71,34 kNm	(CL.4.3.3.4.1)	(2)

Determine the total load $BM_{max} = \frac{wl^2}{8} 71{,}34 = \frac{w \times 4{,}8^2}{8}$ $w = \frac{71{,}34 \times 8}{4{,}8^2}$ w = 24,77 kNm		(2)
Determine the dead load Dead load = area × density × 9,81 × 10^{-3} Dead load = 0,2 × 1 × 2 430 kg/m^3 × 9,81 × 10^{-3} Dead load = 4,77kNm		(2)
Determine the maximum imposed load Total load = 1,2 (Gn) + 1,6 (Qn) 24,77 = 1,2 (4,77) + 1,6 (Qn) Qn = 3,86 kNm	(CL.4.2.2.1)	(2)
The maximum imposed load therefore is: Qn = 11,9 kNm^2		(1) **[12]**

QUESTION 3

All references taken from SANS 10100-1 (2000).

3.1	Fcu = 30 MPa Fy = 450 MPa	Table 2 (4.1.5.1) Table 3 (4.1.5.2)	
	Calculate the nett area of the concrete Nett area of the steel = $4(\frac{\pi d^2}{4}) + 2(\frac{\pi d^2}{4})$ $= 4(\frac{\pi 20^2}{4}) + 2(\frac{\pi 16^2}{4})$ = 1 256,76 + 402 Nett area of the steel = 1 658,76 mm^2 Nett area of concrete = (600 × 200) – 1 658,76 mm^2 = 118 341,24 mm^2		(3)
	Calculate the axial load N = 0,4 fcu Ac + 0,67 fy Asc (Cl. 4.7.4.3) N = (0,4 × 30 × 118 341,24) + (0,67 × 450 × 1 658,76) N = 1 420 094,8 + (500116,14) N = 1 920,2 kN		(4)

	Diameter and spacing of binders Binders: ¼ of the smallest compression bar ¼ × 16 = 4 mm (not available) Use: min R8 binders. (R6 discontinued) Spacing of binders 12 × diameter of smallest compression bar 12 × 12 = 144 mm Use spacing of 140 mm.	(Cl. 4.11.4.5.1)	(1) (1) (9)
3.2	Calculate area of pad foundation $\text{Area} = \frac{\Sigma \text{ of Downward loads}}{\text{Upward soil pressure}}$ $\text{Area} = \frac{3\,400 \text{ kN} + 600 \text{ kN} + 85 \text{ kN}}{220 \text{ kNm}^2}$ Area = 18, 568 m^2 Size of foundation = $\sqrt{18{,}568 \text{ m}^2}$ 4,31 m × 4,31 m Use base size of 4,5m × 4,5m		(5) [14]

QUESTION 4

4.1	$\text{Water : cement ratio} = \frac{\text{Mass of water}}{\text{Mass of cement}}$ $\text{Mass of cement} = \frac{\text{Mass of water}}{\text{Water : cement ratio}}$ $\text{Mass of cement} = \frac{46 \text{ litres}}{0{,}35}$ Mass of cement = 128,6 litres = 128,6 kg		(3)
4.2	Non-ferrous metals **do not contain iron content**; therefore the are **resistant to rust and corrosion**. Non-ferrous metals are also **non-magnetic**.		(2)
4.3	Brass is composed of **copper and zinc** while bronze is composed of **copper and tin**.		(2) **[7]**

QUESTION 5

All references taken from SANS 10100-1 (2000).

	Fcu = 20 MPa Fy = 250 MPa Span = 7,00 m Density of reinforced concrete	Table 2 (4.1.5.1) Table 3 (4.1.5.2) Cl. 4.3.1.2 2 400 kg/m^3	
5.1	Determine the effective depth of the slab Effective depth = span / 16 Effective depth = 7 000 / 16 Effective depth = 437,5 mm	Table 10 (Cl.4.3.6.2.1)	(1)
	Determine the overall depth Assume R20 main steel, R8 binders and 25 mm cover. Overall depth = 437,5 + 10 + 8 + 25 Overall depth = 480,5 mm (Use overall depth = 500 mm)		(2)
5.2	Determine the design dead loads of the beam Design dead load = Volume × density × 9,81 × 10^{-3} × 1,2Gn DDL = 0,50 × 0,32 × 1 × 2 400 kg/m^3 × 9,81 × 10^{-3} × 1,2 Gn Design dead load = 4,52 kNm Design imposed UDL = 7 kNm × 1,6Qn = 11,2 kNm Design imposed point load = 12 kN × 1,6Qn = 19,2 kN	Cl.4.2.2.1 Cl.4.2.2.1	(4)
	Calculate bending moment maximum $BM_{max} = \frac{WL^2}{8} + \frac{WL^2}{8} + \frac{WL}{4}$ $BM_{max} = \frac{4{,}52 \times 7^2}{8} + \frac{11{,}2 \times 7^2}{8} + \frac{19{,}2 \times 7}{4}$ $= 27{,}69 + 68{,}6 + 33{,}6$ $BM_{max} = 129{,}89$ kNm		(3)
	Calculate value for 'K' $K = \frac{BM}{fcu\ b\ d^2}$ $K = \frac{129{,}89 \times 10^6}{20 \times 320 \times 437{,}5^{\ 2}}$ $K = 0{,}106 < K^1 = 0{,}156$ Provide tension reinforcement only.	(Cl.4.3.3.4.1)	(2)

	Calculate distance of lever arm (Z) $Z = d\left\{0{,}5 + \sqrt{0{,}25 - \frac{k}{0{,}9}}\right\} \leq 0{,}95d$ $Z = 437{,}5\left\{0{,}5 + \sqrt{0{,}25 - \frac{0{,}106}{0{,}9}}\right\} \leq 0{,}95 \times 437{,}5$ $Z = 437{,}5\{0{,}864\} \leq 415{,}63$ $Z = 377{,}84$ mm $< 415{,}63$ mm	(Cl.4.3.3.4.1)	(2)
	Calculate tension reinforcement $As = \frac{M}{0{,}87 \times fy \times z}$ $As = \frac{129{,}89 \times 10^6}{0{,}87 \times 250 \times 377{,}84}$ $As = 1\ 518{,}72$ mm² Use 4R25 (As = 1 964 mm²)	(Cl.4.3.3.4.1)	(3)
5.3	Check for minimum main reinforcement $\frac{100\ As}{Ac}$ $= \frac{100 \times 1\ 964}{500 \times 320}$ $= 0{,}92$ $1{,}23 > 0{,}8$ The reinforcement is sufficient.	Table 23 (Cl.4.11.4)	(2)
	Check for maximum area of reinforcement 4% of AC $4\% \times 500 \times 320$ 6 400 mm² $1\ 964 < 6\ 400$ The reinforcement is sufficient.	(Cl.4.11.5.1)	(1) **[20]**

QUESTION 6

6.1	Calculate the effective length Effective height (l) = 1,0 × L $L_{effective} = 1 \times 4{,}75$ m = 4 750 mm (4,750 m)	(SABS 0162-1984 Table 19)	(3)

	Calculate the slenderness ratio $L/r = \frac{4\,750}{37{,}7} = 125{,}99$ (Use 126 MPa) From Table 17 (SABS 0162-1984) 126 = 55 MPa		(2)
	Calculate the maximum load Load = Stress × Area Load = 55 N/mm^2 × 5,702 × 10^3 mm^2 Load = 313,61 kN		(2)
6.2	SABS 0162 -1984 Table 19 states that the compression member will be, effectively held in position and restrained against rotation at both ends. The symbol: 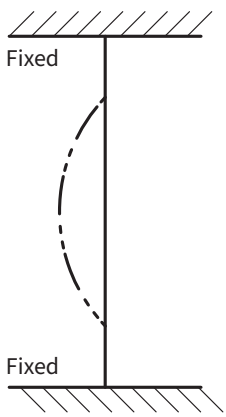 *Figure B* Mark allocation: Code and reference stated = 1 mark Description corr. = 1mark Drawing = 2 marks		(2) (2) **[13]**

QUESTION 7

I-Parallel flange 203 × 133 × 25,3 kg/m		
Given information: Beam A: $I_{xx} = 23{,}49 \times 10^{-6}$ m^3 $\frac{h}{2} = \frac{203{,}2}{2} = 101{,}5$ mm	Beam B: $I_{yy} = 3{,}090 \times 10^{-6}$ m^3 $\frac{b}{2} = \frac{133{,}4}{2} = 66{,}7$ mm	

Calculate bending moment maximum

7.1	Beam A: $\frac{M}{I} = \frac{F}{Y}$ $M = \frac{f \times I}{y}$ $M = \frac{165 \times 23{,}49 \times 10^6}{101{,}5}$ M = 38,186 kN m	Beam B: $\frac{M}{I} = \frac{F}{Y}$ $M = \frac{f \times I}{y}$ $M = \frac{165 \times 3{,}090 \times 10^6}{66{,}7}$ M = 7,643 kN m	(3) + (3)

Calculate maximum point load

7.1	Beam A: $BM = \frac{Wl^2}{8}$ $38{,}186 = \frac{W \times 5{,}55^2}{8}$ $W = \frac{38{,}186 \times 8}{5{,}55^2}$ W = UDL = 9,92 kNm	Beam B: $BM = \frac{Wl^2}{8}$ $7{,}643 = \frac{W \times 5{,}55^2}{8}$ $W = \frac{7{,}643 \times 8}{5{,}55^2}$ W = UDL = 1,98 kNm	(2 × 4)

7.2 The loads (W) are not the same because the **second moment of area differs as the beams rotated**. This also causes the **section modulus to change**.
At beam 'A', the load is, subjected vertically through the stronger centre of the beam.
At beam 'B', the load is, subjected on the horizontal web. This will cause the web to bend, thus collapsing the beam. (2)

7.3

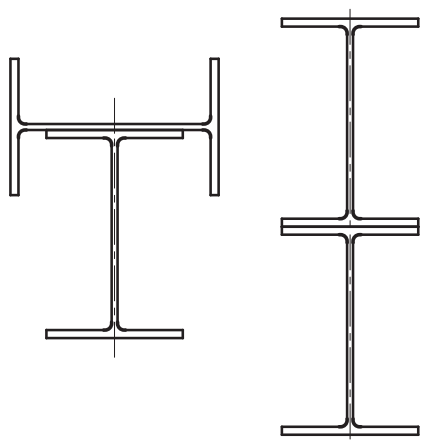

Figure C

(Also consider alternative arrangements.) (2 × 2)

[16]

Total: 100 marks

Exemplar examination paper 2 memorandum

QUESTION 1

All references taken from SANS 10100-1 (2000).

	Fcu = 30 MPa Fy = 450 MPa Axial load = 7 500 kN	Table 2 (4.1.5.1) Table 3 (4.1.5.2)	
1.1	<u>Calculate the number of longitudinal reinforcement</u> N = 0,4 fcu Ac + 0,67 fy Asc (Cl. 4.7.4.3) $7\,500 \times 10^3 = 0{,}4 \times 30 \times \left(\frac{\pi\, 850^2}{4}\right) + 0{,}67 \times 450 \times \text{Asc}$ $8\,500 \times 10^3 = 6\,809\,402{,}07 + 301{,}5\ \text{Asc}$ $7\,500 \times 10^3$ minus $6\,809\,402{,}07 = 301{,}5\ \text{Asc}$ $\text{Asc} = \frac{690\,597{,}93}{301{,}5}$ Asc = 2 290,54 mm² Use 8Y20 (As = 2 513 mm²) (Minimum spacing between bars = height aggregate + 5 mm)		(4)
1.2	<u>Maximum and minimum percentage of the steel reinforcement</u> <u>Maximum</u>: 6% of gross sectional area (Cl. 4.11.4.5.2) $6\% \times \left(\frac{\pi\, 850^2}{4}\right) = 34\,047{,}01\ \text{mm}^2$ <u>Minimum</u>: 0,4% of gross sectional area (Table 23) $0{,}4\% \times \left(\frac{\pi\, 850^2}{4}\right) = 2\,269{,}8\ \text{mm}^2$		(2)
1.3	<u>Calculate the diameter of the helical binder</u> <u>Binders:</u> ¼ of the smallest main bar ¼ × 32 = 8 mm Use: R8 Helical binder.	(Cl. 4.11.4.5.1)	(2)

	Calculate the pitch of the binder. Spacing of binders: 12 × diameter of smallest main bar 12 × 20 = 240 mm (maximum) Use Binder pitch = 240 mm Summary: 8y20 main bars with R8 helical binders at 240 mm pitch.	(Cl. 4.11.4.5.1)	(2)
1.4	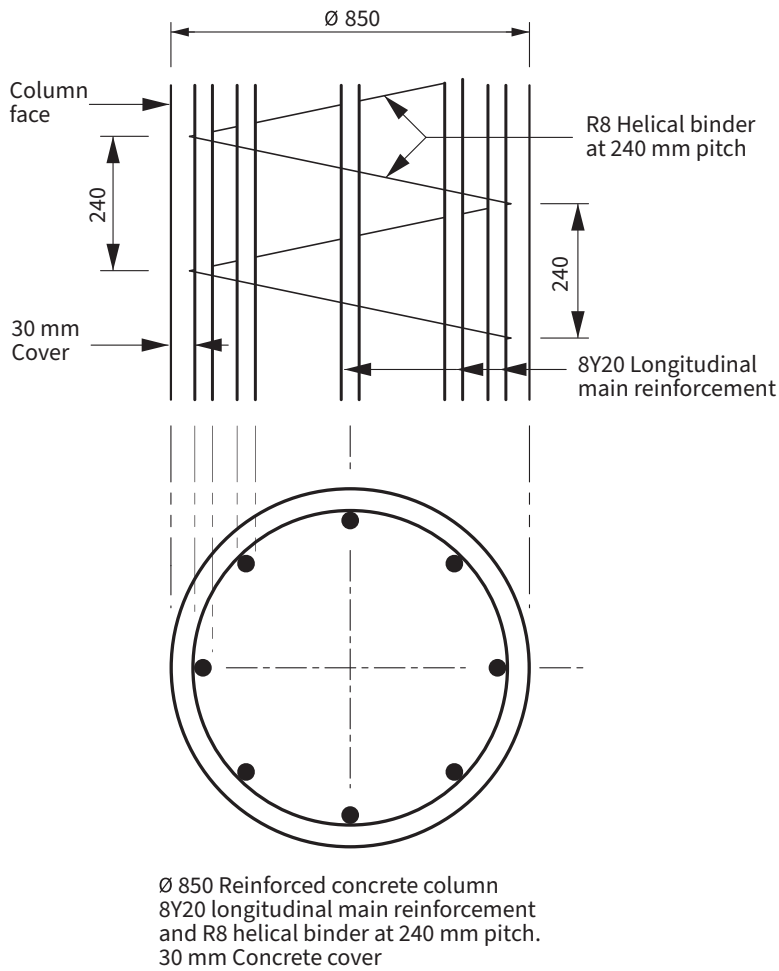 *Figure A* Top view correct = 1 Sectional view = 2 Reinforcement = 2 5		**[15]**

QUESTION 2

2.1	Calculate the reactions Take moments about RL: $(RR \times 9) = (48 \times 6{,}75) + (55 \times 4{,}5) + (28 \times 2{,}25)$ $RR9 = 324 + 247{,}5 + 63$ $RR = 634{,}5 / 9$ $RR = 70{,}5$ kN		(2)
	Take moments about RR: $(RL \times 9) = (28 \times 6{,}75) + (55 \times 4{,}5) + (48 \times 2{,}25)$ $RL\ 9 = 189 + 247{,}5 + 108$ $RL = 544{,}5 / 9$ $RL = 60{,}5$ kN		(2)

Determine the size and type of the members.

2.2	$\Sigma VC = 0$ $AB \text{ Sin } 30^o = 60{,}5$ kN $AB = 60{,}5 / \text{Sin } 30^o$ $AB = 121$ kN (Strut) $\Sigma HC = 0$ $BE = A \text{ Cos } 30^o$ $BE = 121 \times \text{Cos } 30^o$ $BE = 104{,}79$ kN (Tie) 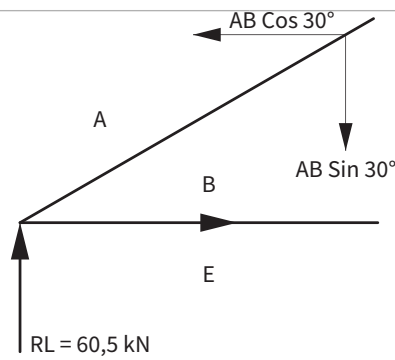 *Figure B*		(6)
	$\Sigma VC = 0$ $121 \text{ Sin } 30^o + BD \text{ Sin } 30^o = 28 + CD \text{ Sin } 30^o$ $60{,}5 + 0{,}5BD = 28 + 0{,}5CD$ $60{,}5 + 0{,}5BD - 28 = 0{,}5CD$ $32{,}5 + 0{,}5BD = 0{,}5CD$ $CD = \dfrac{32{,}5 + 0{,}5BD}{0{,}5}$ $CD = 65 + BD \ldots(1)$		(3)

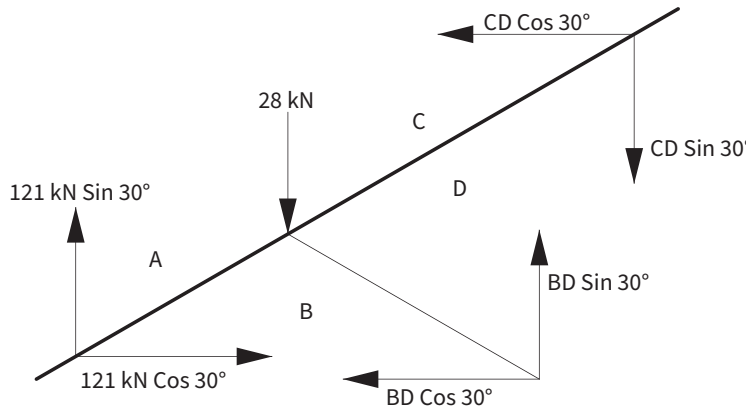

Figure C

2.3	$\Sigma HC = 0$ $121 \text{ Cos } 30^o = CD \text{ Cos } 30^o + BD \text{ Cos } 30^o$ $104{,}79 = 0{,}866\ CD + 0{,}866\ BD$ $104{,}79 = 0{,}866\ (65 + BD) + 0{,}866\ BD$ $104{,}54 = 56{,}29 + 0{,}866\ BD + 0{,}866\ BD$ $BD = \frac{164{,}54 - 56{,}29}{1{,}732}$ BD = 62,5 kN (Strut) Therefore CD = 65 + BD CD = 65 + 62,5 = 127,50 kN (Strut)		(5) **[18]**

QUESTION 3

Calculate reactions

3.1	<u>Take moments about RL:</u> $(RR \times 9) = (12{,}8 \times 9 \times 4{,}5) + (4{,}475 \times 9 \times 4{,}5) + (88 \times 5{,}5)$ RR = 518,4 + 181,24 + 484 / 9 (1 183,64 / 9) RR = 131,52 kN <u>Take moments about RR:</u> $(RL \times 9) = (12{,}8 \times 9 \times 4{,}5) + (4{,}475 \times 9 \times 4{,}5) + (88 \times 3{,}5)$ RL = 518,4 + 181,24 + 308 / 9 (1 007,64 / 9) RL = 111,96 kN	(2)

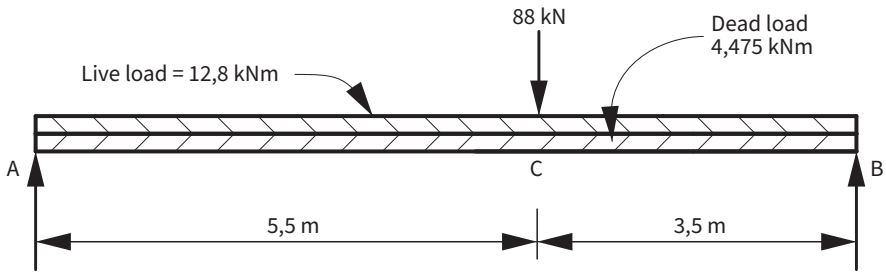

Figure D

3.2 **Shear force diagram**

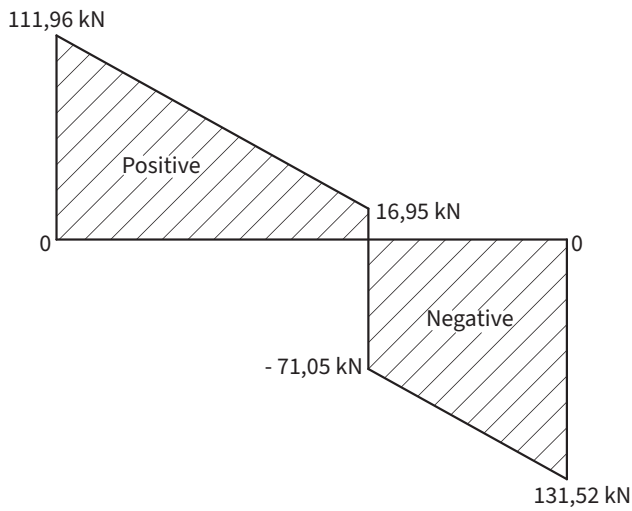

Figure E (2)

3.3 <u>Calculate bending moment Max</u>

BM at 'C': (131,52 × 3,5) – (12,8 × 3,5 × 1,75) – (4,475 × 3,5 × 1,75)

460,32 – 78,4 – 27,41

BM at 'C' = 354,51 kNm (2)

	Bending moment diagram 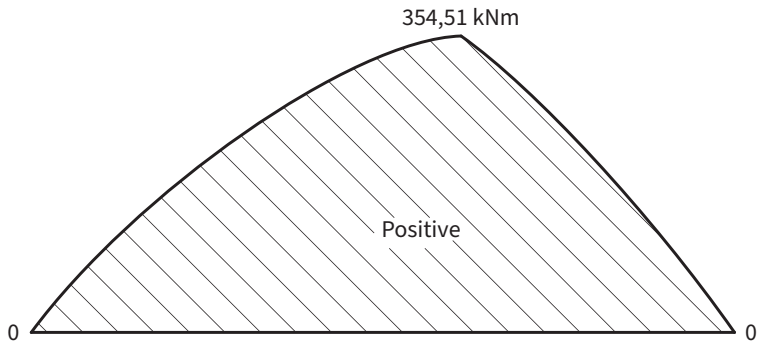 ***Figure F***		(2)
3.4	Calculate value for 'K' $K = \frac{BM}{fcu\ b\ d^2}$ $K = \frac{354{,}51 \times 10^6}{25 \times 330 \times 425^2}$ K = 0,238 K < K^1 = 0,156 Compression reinforcement will therefore be required.	(Cl.4.3.3.4.1) d = 475 –50 cover = 425 mm	(3) **[13]**

QUESTION 4

4.1	Select a suitable I-section steel beam $\frac{M}{I} = \frac{f}{y}$ Bending moment max = $\frac{w \times l^2}{8}$ $= \frac{65 \times 6{,}35^2}{8}$ BM max = 327,62 kNm Then: $z = \frac{M}{f}$ $z = \frac{327{,}62 \times 10^6}{156}$ z = 2 100 128,2 mm^3 z = 2 100, 13 × 10^{-6} m^3 Select 533 × 210 × 101 kg/m (Z_e value = 2 297 × 10^{-6} m^3)		(5)

4.2	<u>Check if the beam is adequate</u> Determine the self-weight of the beam Dead load = 101 kg/m × 9,81 × 10^{-3} Dead load = 0,991 kNm Total load = 65 kNm + 0,991 kNm = 65,991 kNm Revised bending moment max = $\frac{w \times l^2}{8}$ $= \frac{65{,}991 \times 6{,}35^2}{8}$ BM max = 332,62 kNm Maximum bending moment Then: $z = \frac{M}{f}$ $z = \frac{332{,}62 \times 10^6}{156}$ z = 2 132 187,5 mm^3 z = 2 132, 9 × 10^{-6} m^3 The selected steel beam is 533 × 210 × 101 kg/m (Z_e value = 2 297 × 10^{-6} m^3) is adequate the support its own weight as well as the imposed load.		(7) **[12]**

QUESTION 5

All references taken from SANS 10100-1 (2000).

	Fcu = 25 MPa Fy = 450 MPa Span = 8 metres Density of reinforced concrete	Table 2 (4.1.5.1) Table 3 (4.1.5.2) Cl. 4.3.1.2 2 425 kg/m^3	(5)
5.1	<u>Determine the effective depth of the beam</u> Effective depth = span / 16 Effective depth = 8 000 / 16 Effective depth = 500 mm	Table 10 (4.3.6.2.1)	(1)

5.2	<u>Determine the overall depth</u> Assume Y25 main steel and Y10 binders Assume Cover of 25 mm. Overall depth = $500 + \frac{25}{2} + 10 + 25$ Overall depth = 547,5 mm (Use overall depth = 550 mm)		(2)
	<u>Determine the design dead loads of the beam</u> Design dead load = Volume × density × $9{,}81 \times 10^{-3} \times 1{,}2$Gn DDL = $0{,}55 \times 0{,}33 \times 1 \times 2\,425$ kg/m^3 × $9{,}81 \times 10^{-3} \times 1{,}2$ Gn Design dead load = 5,18 kNm Design imposed load = 36 kNm × 1,6Qn Design imposed load = 57,6 kNm Total design load = 5,18 + 57,6 = 62,78 kNm	(Cl.4.2.2.1) (Cl.4.2.2.1)	(2) (2)
5.3	<u>Calculate bending moment maximum</u> $BM_{max} = \frac{WL^2}{8}$ $BM_{max} = \frac{62{,}78 \times 8{,}0^2}{8}$ $BM_{max} = 502{,}25$ kNm		(2)
	<u>Calculate value for 'K'</u> $k = \frac{BM}{fcu\ b\ d^2}$ $k = \frac{502{,}25 \times 10^6}{25 \times 330 \times 500^2}$ $k = 0{,}244 > K^1 = 0{,}156$ Tension and compression reinforcement required.	(Cl.4.3.3.4.1)	(2)
5.4	<u>Calculate distance of lever arm (Z)</u> $Z = d\left\{0{,}5 + \sqrt{0{,}25 - \frac{k^1}{0{,}9}}\right\}$ $Z = 500\left\{0{,}5 + \sqrt{0{,}25 - \frac{0{,}156}{0{,}9}}\right\}$ $Z = 500\{0{,}777\}$ Z = 388,50 mm	(Cl.4.3.3.4.1)	(2)

5.5	<u>Determine compression reinforcement</u> $A's = \frac{(k - k^1)\ Fcu\ b\ d^2}{Fyc\ (d - d^1)}$ (Use d^1 = 50 mm) Where: $Fyc = \frac{Fy}{1{,}15 + \frac{Fy}{2\ 000}}$ $Fyc = \frac{450}{1{,}15 + \frac{450}{2\ 000}}$ Fyc = 327 MPa $A's = \frac{(0{,}244 - 0{,}156)\ 25 \times 330 \times 500^2}{327\ (500 - 50)}$ A's = 1 233,44 mm² Use 4Y20 (As = 1 257 mm²)	(Cl.4.3.3.4.1) Figure 2 ɣm = 1,15 (Cl.3.3.3.2)	(2)
	<u>Check for minimum compression reinforcement</u> $\frac{100\ As}{Ac} = \frac{100 \times 1\ 257}{550 \times 330}$ = 1,06 0,69 > 0,24 The reinforcement is sufficient.	Table 23 (Cl.4.11.4)	(1)
5.6	<u>Determine tension reinforcement</u> $As = \frac{k^1\ Fcu\ b\ d^2}{0{,}87 \times fy \times z} + \frac{A's\ Fyc}{0{,}87 \times fy}$ $As = \frac{0{,}156 \times 25 \times 330 \times 500^2}{0{,}87 \times 450 \times 388{,}5} + \frac{1\ 257 \times 327}{0{,}87 \times 450}$ As = 2 115,42 + 1 049,91 As = 3 165,33 mm² Use 4y32 (As = 3 217 mm²)	(Cl.4.3.3.4.2)	
5.7	<u>Check for minimum main reinforcement</u> $\frac{100\ As}{Ac} = \frac{100 \times 3\ 217}{550 \times 330}$ = 1,77 1,77 > 0,45 The reinforcement is sufficient	Table 23 (Cl.4.11.4)	

	Check for maximum area of reinforcement 4% of AC 4% × 550 × 330 5 940 mm² (3 217 + 1 257) < 7 260 The reinforcement is sufficient	(Cl.4.11.5.1)	(1) **[22]**

QUESTION 6

6.1	I-Section parallel flange (457 × 191 × 89,7 kg/m) $I_{xx} = 411{,}4 \times 10^{-6}\ m^4$ $Y = 463{,}6/2 = 231{,}8$ mm Bending stress = 175 MPa		
	Self-weight of the steel beam Weight = 89,7 kg/m × 9,81 × 10^{-3} Weight = 0,88 kNm		(1)
	Calculate the bending moment maximum $BM_{max} = \frac{w\,L}{4} + \frac{W\,L^2}{8}$ $BM_{max} = \frac{375 \times L}{4} + \frac{0{,}88 \times L^2}{8}$ $BM_{max} = (93{,}75\ L + 0{,}11\ L^2)$		(2)
	Equate to maximum bending moment $\frac{M}{I} = \frac{f}{y}$ $\frac{(93{,}73\ L + 0{,}11\ L^2) \times 10^6}{411{,}4 \times 10^6} = \frac{175}{231{,}8}$ $231{,}8\ (93{,}73\ L + 0{,}11\ L^2) = 175 \times 411{,}4$ $21\,726{,}614\ L + 25{,}498\ L^2 = 71\,995$ Span: $25{,}489\ L^2 + 21\,726{,}614\ L = 71\,995$ (divide by 25,489) Span: $L^2 + 852{,}09\ L - 2\,823{,}55$ Span $= \frac{-b \pm \sqrt{b^2 - 4\,ac}}{2\,a}$ Span (L) $= \frac{-852{,}09 \pm \sqrt{852{,}09^2 - 4 \times 1 \times -2\,823{,}55}}{2 \times 1}$ Span (L) $= \frac{-852{,}09 \pm 858{,}69}{2}$ Span(L) = 3,3 m		(5) **[8]**

6.2	Effective length on each side: Total effective length: Throat thickness: Throat area: Safe load:	130 – (2 × 8) = 114 mm 2 × 114 = 228 mm Sin 45° × 8 = 5,66 mm 5,66 mm × 228 mm = 1 290,5 mm^2 Stress × area $130\frac{N}{mm^2} \times 1\ 290{,}5\ mm^2$ = 167,765 kN		(5) **[13]**

QUESTION 7

7.1 Any TWO of the following:
Iron ore, coal, limestone and recycled steel. (2)

7.2 19 mm. (Also accept 13 mm). (1)

7.3 Any TWO of the following:
The water:cement ratio determines the potential **strength**, **permeability** and **durability** of the hardened concrete. (2)

7.4 The aim of the water permeability test is to determine how **durable and resistant the concrete is in extreme weather conditions** and **exposure to its environment**. (2)

[7]

Total: 100 marks

Exemplar examination paper 3 memorandum

QUESTION 1

1.1	Any TWO of the following: • It has simple construction design. • The cupola requires less floor space. • A can melt a wide range of materials. • The construction and maintenance of the cupola is cost effective. • It does not require highly skilled operators.		(2)
1.2	Any TWO of the following: • Leaving the formwork in place, • Covering the concrete with a material that would shelter it from direct sunlight by keeping the concrete moist. • Applying a membrane-forming compound.		(2)
1.3	Any TWO of the following: • The bending test • The slump test. • The water permeability test • The cube test. • The concrete abrasion test.		(2) **[6]**

QUESTION 2

2.1	Select a suitable rolled steel angle for marked part 'S' (Tie) Force = 62 kN Select trial section: 70 × 70 × 6 mm. Area = 0,813 × 10^3 mm² Allowable stress = 155 MPa Calculate effective area (Aeff) $A_{eff} = \frac{3(A1)^2 + 4\,A1\,A2}{3A1 + A2}$ A_1 = Connected leg $A_1 = t(b - \frac{t}{2}) - (\text{area of hole})$ $A_1 = 6(70 - \frac{6}{2}) - (22 \times 10)$ (M18 bolts) $A_1 = 294$ mm² A_2 (unconnected leg) 90 $A_2 = t(b - \frac{t}{2})$ $A_2 = 6(70 - \frac{6}{2})$ $A_2 = 402$ mm² $A_{eff} = \frac{3\,(294)^2 + 4(294)(402)}{3(294) + (402)}$ $A_{eff} = \frac{732\,060}{1\,284}$ $A_{eff} = 570{,}14$ mm² (0,57014 × 10^3 mm²)	(SABS 0162 Table 20) (SABS 0162 Cl. 9.2.1) Where A_1 is the connected leg and A_2 is the unconnected leg	(2) (3)
	Therefore Load: Force = Pt × A_{eff} Force = 155 Nmm² × 570,14 mm² Force = 88,4 kN The bolted tie bar will be able to withstand the given load of 62 kN	(Table 20 SANS 10162)	(3)

2.2	Select a suitable rolled steel angle for marked Part 'T' (Strut) Force = 76 kN The angle is discontinuous. Actual length = 0,9 m Effective length = 0,9 × 0,85 L_{eff} = 0,765 (765 mm) Select trial section: 70 × 70 × 6 mm. Area = 0,813 × 10^3 mm^2 R_{min} = 13,7 mm Calculate slenderness ratio $L/r = \frac{765}{13,7}$ = 55,83 55,83 = 129,15 MPa (Table 17)	(SABS 0162 Table 20)	(3)
2.3	Therefore load: Calculate the load Load = stress × area = 107,25 × 0,183 × 10^3 Load = 87,2 kN The 70 × 70 × 6 will be suitable.	(Table 20 SANS 10162)	(2) **[13]**

QUESTION 3

All references taken from SANS 10100-1 (2000).

	Fcu = 25 MPa Fy = 450 MPa Efective span Dead load Imposed load	Table 2 (4.1.5.1) Table 3 (4.1.5.2) 5,5 m 6,5 kNm^2 7,5 kNm^2	
3.1	Calculate the lever arm distances $Z = d\left\{0,5+\sqrt{0,25-\frac{K^1}{0,9}}\right\} \leq 0,95d$ $Z = 475\left\{0,5+\sqrt{0,25-\frac{0,156}{0,9}}\right\}$ Z = 475(0,777) Z = 369, 1 mm	(Cl.4.3.3.4.1)	(2)

3.2	<u>Determine the position of the neutral axis</u> $X = \frac{d - z}{0,45}$ $X = \frac{475 - 369,1}{0,45}$ X = 235,33 mm > 150 mm Therefore, the N A lies below the flange.	(Cl.4.3.3.4.1)	(3)
3.3	<u>Calculate the total design load</u> W = 1,2(Gn) + 1,6 (Qn) W = 1,2(6,5 × 1) + 1,6(7,5 × 1) W = 7,80 + 12,0 W = 19,8 kNm	(Cl.4.3.3.4.1)	(2)
3.4	<u>Calculate bending moment due to the concrete</u> $BM = \frac{wl^2}{8}$ $BM = \frac{19,8 \times 5,5^2}{8}$ BM = 74,87 kNm	(Cl.4.3.3.4.1)	(2)
3.5	<u>Calculate tension reinforcement</u> $As = \frac{m + 0,1\, fcu\, b_w\, d\left(0,45d - h_f\right)}{0,87\, fy\left(d - 0,5\, h_f\right)}$ As $= \frac{74,87 \times 10^6 + (0,1 \times 25 \times 220 \times 475)\,(0,45 \times 475 - 120)}{0,87 \times 450\,(475 - 0,5 \times 120)}$ $As = \frac{74,87 \times 10^6 + (261\,250)\,(93,75)}{0,87 \times 450\,(415)}$ $As = \frac{74,87 \times 10^6 + 24\,492\,187,5}{162\,472,5}$ $As = \frac{99\,362\,187,5}{162\,472,5}$ As = 611,55 mm^2 Use 2R20 bars (As = 628 mm^2)	(Cl.4.3.3.4.2)	(1) (1) (2) **[13]**

QUESTION 4

Given information:

3.2	<u>Plate: 180 mm × 18 mm</u> $I_{xx} = \frac{b\,d^3}{12} = \frac{0{,}180 \times 0{,}018^3}{12} = 0{,}0875 \times 10^{-6}\ m^4$ Area = 0,180 × 0,018 = 3,24 × 10^{-3} m^2 <u>305 × 102 × 32,6 kg/m I-Parallel flange:</u> $I_{xx} = 65{,}01 \times 10^{-6}\ m^4$ Area = 4,183 × 10^{-3} m^2 $\frac{h}{2} = \frac{312{,}7}{2} = 156{,}35$ mm <u>Plate: 102,4 mm × 12 mm</u> $I_{xx} = \frac{b\,d^3}{12} = \frac{0{,}1024 \times 0{,}012^3}{12} = 0{,}01475 \times 10^{-6}\ m^4$ Area = 0,1024 × 0,012 = 1,229 × 10^{-3} m^2 Total area = 3,24 × 10^{-3} m^2 + 4,183 × 10^{-3} m^2 + 1,229 × 10^{-3} m^2 Total Area = 8,652 × 10^{-3} m^2 (1)	
4.	<u>Calculate neutral axis using area moments from bottom</u> 8,652 × 10^{-3} m^2 × Y_1 = (3,24 × 10^{-3} m^2 × 0,009) = 0,0292 × 10^{-3} + (4,183 × 10^{-3} m^2 × 0,1895) = 0,7921 × 10^{-3} + (1,229 × 10^{-3} m^2 × 0,3367) = 0,4138 10^{-3} Total = 1,2351 × 10^{-3} m^2 $Y_1 = \frac{1{,}2351 \times 10^{-3}\ m^2}{8{,}652 \times 10^{-3}\ m^2}$ Y_1 = 0,14275 m Y_1 = 142,75 mm	(4)

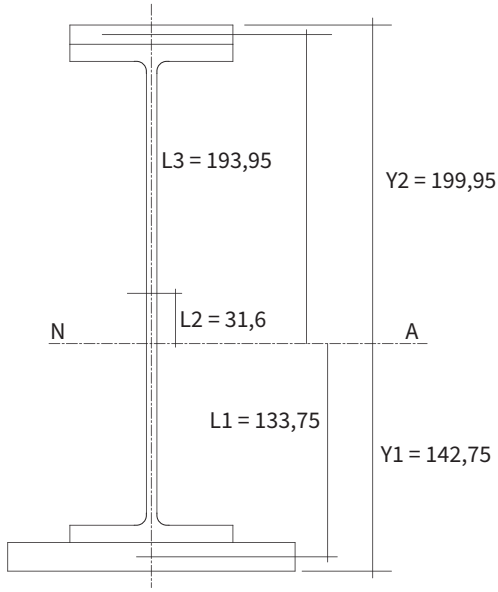

Figure A

4.	Calculate second moment of area (Ixx total) $I_{xx\ tot} = (I_{xx}\ \text{Plate} + al^2) + (I_{xx}\ \text{Beam} + al^2) + (I_{xx}\ \text{Plate} + al^2)$ $I_{yy\ Plate} = (0{,}0875 \times 10^{-6} + 3{,}24 \times 10^{-3} \times 0{,}13375^2)$ $= (0{,}0875 \times 10^{-6} + 57{,}96 \times 10^{-6}) = \underline{58{,}05 \times 10^{-6}\ m^4}$ $I_{xx\ Beam} = (65{,}01 \times 10^{-6} + 4{,}183 \times 10^{-3} \times 0{,}0316^2)$ $= (65{,}01 \times 10^{-6} + 4{,}177 \times 10^{-6}) = \underline{69{,}87 \times 10^{-6}\ m^4}$ $I_{xx\ Plate} = (0{,}01475 \times 10^{-6} + 1{,}229 \times 10^{-3} \times 0{,}19395^2)$ $= (0{,}01475 \times 10^{-6} + 46{,}23 \times 10^{-6}) = \underline{46{,}25 \times 10^{-6}\ m^4}$ $I_{xx\ total} = \underline{174{,}17 \times 10^{-6}\ m^4}$	(7)
	Calculate maximum bending moment (Bending stress = 158 MPa) $\frac{M}{I} = \frac{f}{y}$ where $M = \frac{f \times I}{y}$ $BM_{max} = \frac{165 \times 174{,}17 \times 10^6}{142{,}75}$ $BM_{max} = 201{,}32\ kNm$	(3)

	Calculate the self-weight of the beam Plate: 7 865 kg/m^3 × 0,180 × 0,018 × 9,81 × 10^{-3} = 0,25 kNm Beam: 65,1 kg/m × 9,81 × 10^{-3} = 0,638 kNm Plate: 7 865 kg/m^3 × 0,1024 × 0,012 × 9,81 × 10^{-3} = 0,095 kNm Total self-weight = 0,983 kNm	(2)
	Calculate the maximum point load the beam can carry Additional 15 kNm UDL $BM = \frac{W\,l^2}{8} + \frac{W\,l^2}{8} + \frac{W\,l^2}{8}$ $201{,}32 = \frac{0{,}983 \times 6{,}25^2}{8} + \frac{35 \times 6{,}25^2}{8} + \frac{W \times 6{,}25^2}{8}$ $201{,}32 = 4{,}8 + 170{,}9 + 4{,}88\ W$ $W = \frac{201{,}32 - 170{,}9}{4{,}88}$ W = 6,23 kN	(3) [20]

QUESTION 5

5.	Calculate the direct shear on each bolt Force direct = Force / No of bolts F_{direct} = 28 kN / 2 = 14 kN	(1)
	Calculate the distance from the centroid to the furthest bolt r = 200 / 2 = 100 mm	(1)
	The direct load on the bolts due to the imposed load Σcwm = Σacwm $(28 \times 300) = (F_T \times 100 \times 2)$ $F_T = \frac{28 \times 300}{100 \times 2}$ F_T = 42 kN	(3)
	The resultant load on each bolt F_R = 14 + 42 = 56 kN	(2)

	Calculate the size of the bolts. (Shear stress = 105 MPa) F_R = Shear stress × Area of bolt $\frac{\pi d^2}{4} = \frac{Fr}{\text{Shear stress}}$ $d = \sqrt{\frac{Fr \times 4}{\pi \times stress}}$ $d = \sqrt{\frac{56 \times 10^3 \ x \ 4}{\pi \times 125}}$ d = 23,88 mm Use 2M24 bolts	(4) **[11]**

QUESTION 6

All references taken from SANS 10100-1 (2000).

	Fcu = 25 MPa Fy = 250 MPa Span = 5,25 m Density of reinforced concrete	Table 2 (4.1.5.1) Table 3 (4.1.5.2) Cl. 4.3.1.2 2 450 kg/m^3	
6.	Determine the effective depth of the slab Effective depth = span / 16 Effective depth = 5 250 / 16 Effective depth = 328,13 mm	Table 10 (4.3.6.2.1)	(1)
	Determine the overall depth *Assume R16 main steel and cover of 25 mm.* Overall depth = 328,13 + 16/2 + 25 cover Overall depth = 361,13 mm (Use overall depth = 370 mm)		(2)
	Determine the design dead loads of the slab Design dead load = Volume × density × 9,81 × 10^{-3} × 1,2Gn = 0,37 × 1 × 1 × 2 450 kg/m^3 × 9,81 × 10^{-3} × 1,2 Gn Design dead load = 10,67 kNm Design imposed load = 7,5 kNm^2 × 1 × 1,6Qn Design imposed load = 12,0 kNm Total design load = 10,67 + 12,0 = 22,38 kNm	Cl.4.2.2.1 (Cl.4.2.2.1)	(3)

	Calculate bending moment maximum $BM_{max} = \frac{WL^2}{8}$ $BM_{max} = \frac{22{,}67 \times 5{,}25^2}{8}$ $BM_{max} = 78{,}11$ kNm		(2)
	Calculate value for 'K' $K = \frac{BM}{fcu\ b\ d^2}$ $K = \frac{78{,}11 \times 10^6}{25 \times 1\ 000 \times 328{,}13^2}$ $K = 0{,}029$ $K < K^1 = 0{,}156$ therefore only tension reinforcement required.	4.3.3.4.1	(2)
	Calculate distance of lever arm (Z) $Z = d\left\{0{,}5 + \sqrt{0{,}25 - \frac{k}{0{,}9}}\right\} \leq 0{,}95d$ $Z = 328{,}13\left\{0{,}5 + \sqrt{0{,}25 - \frac{0{,}029}{0{,}9}}\right\} \leq 0{,}95d$ $Z = 328{,}13\{0{,}97\} \leq 0{,}95 \times 328{,}13$ $Z = 317{,}19$ mm $\leq 311{,}72$ mm $\leq 0{,}95d$	(Cl.4.3.3.4.1)	(2)
	Calculate tension reinforcement $As = \frac{M}{0{,}87 \times fy \times z}$ $As = \frac{77{,}11 \times 10^6}{0{,}87 \times 250 \times 317{,}19}$ $As = 1\ 117{,}72\ mm^2$ Use R16 at 175 centres ($As = 1\ 149\ mm^2$)	(Cl.4.3.3.4.1)	(2)
	Check for minimum main reinforcement $\frac{100\ As}{Ac} = \frac{100 \times 1\ 149}{1000 \times 360}$ $= 0{,}32$ $0{,}24 = 0{,}32$ The reinforcement is sufficient.	Table 23 (Cl.4.11.4)	(2)

	Determine secondary reinforcement $\frac{100\ As}{Ac} = 0{,}24$ $As = \frac{0{,}24 \times 1\ 000 \times 360}{100}$ $As = 864\ mm^2$ Use R12 at 125 centres ($As = 905\ mm^2$)	Cl.4.11.4.3.1 & Table 23	(2) [18]

Total: 100 marks