higher education & training

Department:
Higher Education and Training
REPUBLIC OF SOUTH AFRICA

MARKING GUIDELINE

NATIONAL CERTIFICATE: MULTI-DISCIPLINARY DRAWING OFFICE PRACTICE

TECHNICAL ILLUSTRATION N5

21 November 2023

This marking guideline consists of 5 pages.

Copyright reserved

ANSWER SHEET **EXAMINATION NUMBER:**

QUESTION 1

1.1	1.1.1	understand – execute	(2)
	1.1.2	realistic – three point	(2)
	1.2.3	one-point – three-point	(2)

QUESTION 2

QUESTIONS 1, 2, 3 – 2 MARKS EACH = 6 MARKS

CORRECTNESS	10	ITEM ONE	5
		ITEM TWO	5

			10

LINEWORK	3
ACCURACY	2
BALANCED LAYOUT	1
	----
	16 MARKS

QUESTION 3

CORRECTNESS	14	ITEM ONE	14

			14

LINEWORK	4
ACCURACY	2
BALANCED LAYOUT	2
	----
	22 MARKS

QUESTION 4

CORRECTNESS	31,5	ITEM ONE – WEDGE BLOCK	31,5

			31,5

LINEWORK	11
ACCURACY	8,5
BALANCED LAYOUT	5
	----
	56 MARKS

TOTAL: 100

Copyright reserved

QUESTION 2

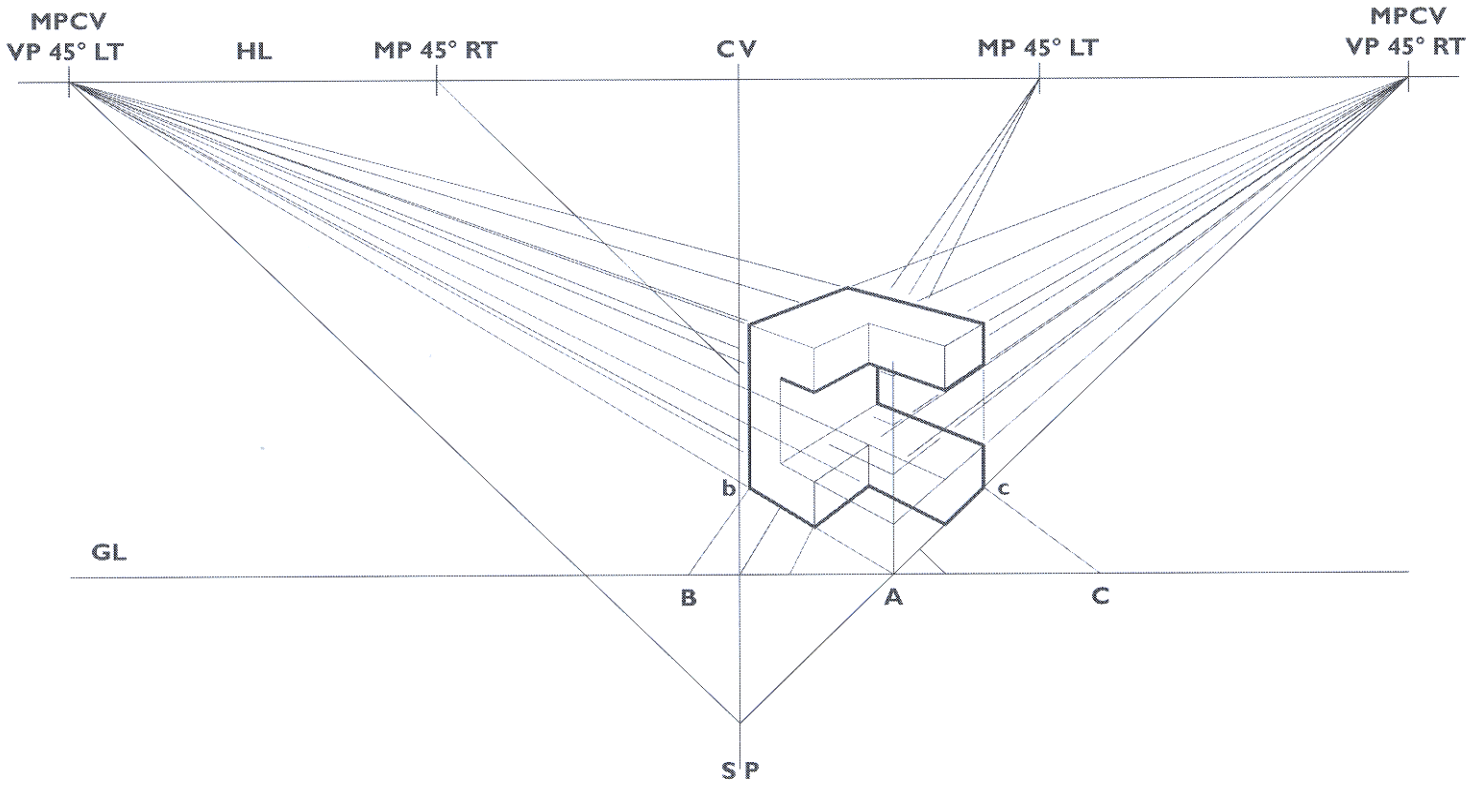

QUESTION 3

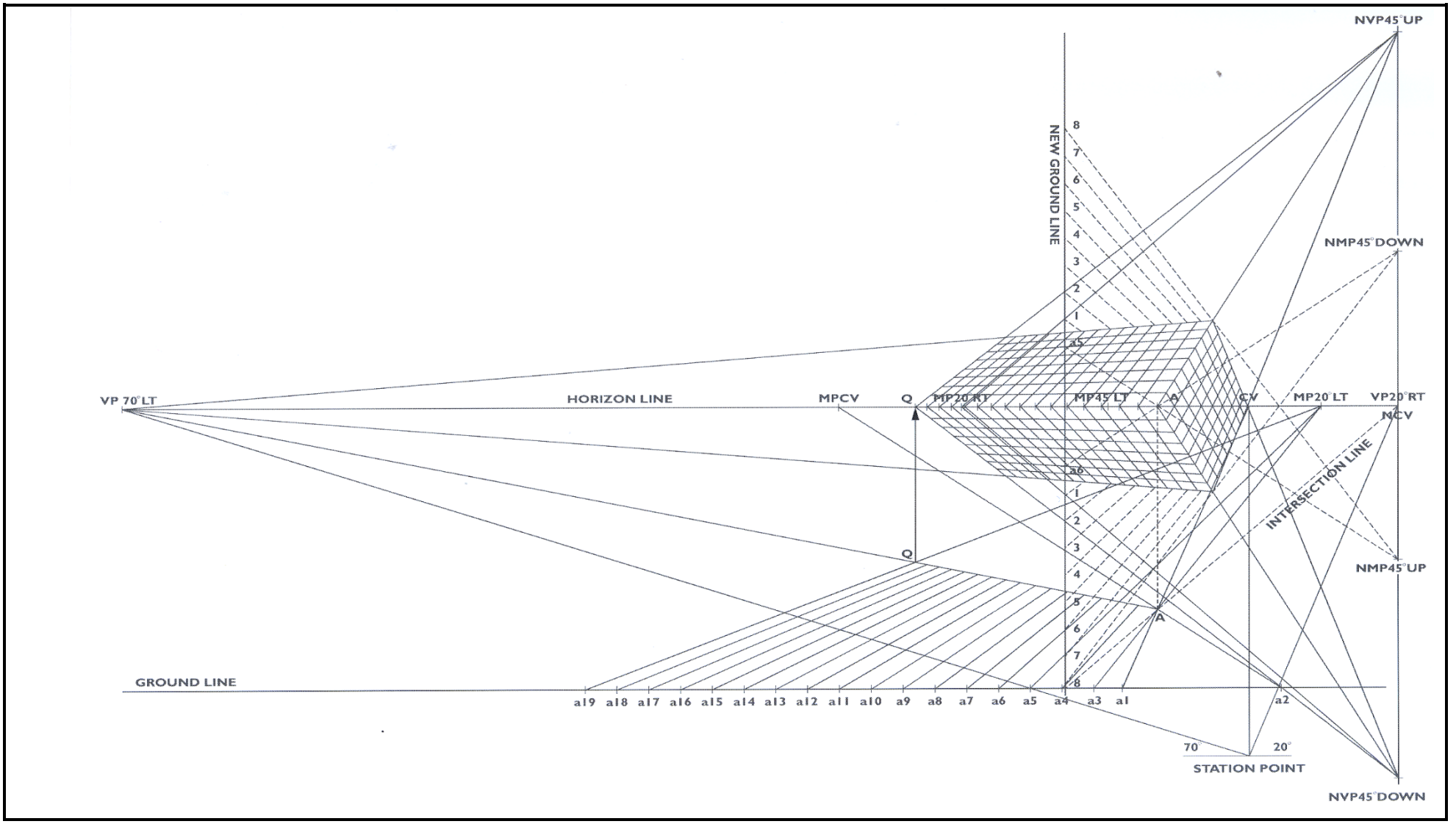
NVP45°UP
NEW GROUND LINE
NMP45°DOWN
VP 70°LT
HORIZON LINE
MPCV
Q
MP20°RT
MP45°LT
A
CV
MP20°LT
VP20°RT
NCV
INTERSECTION LINE
NMP45°UP
GROUND LINE
a19 a18 a17 a16 a15 a14 a13 a12 a11 a10 a9 a8 a7 a6 a5 a4 a3 a1
a2
70°
20°
STATION POINT
NVP45°DOWN

QUESTION 4

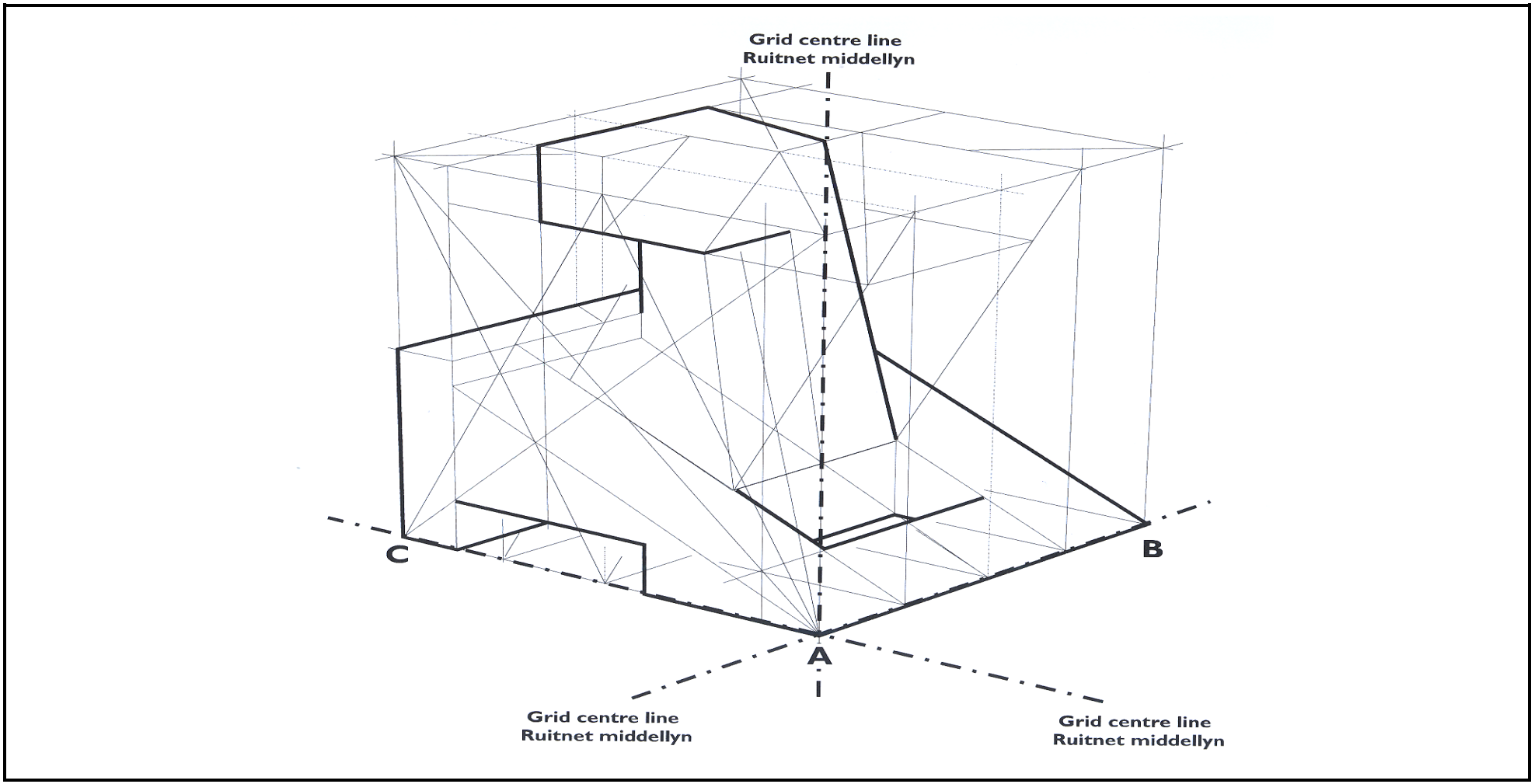

Copyright reserved