higher education & training

Department:
Higher Education and Training
REPUBLIC OF SOUTH AFRICA

NATIONAL CERTIFICATE

INDUSTRIAL INSTRUMENTS N5

(8080205)

1 December 2022 (X-paper)
09:00–12:00

Drawing instruments and nonprogrammable calculators may be used.

This question paper consists of 6 pages and 1 formula sheet.

308Q1E2201

Copyright reserved

DEPARTMENT OF HIGHER EDUCATION AND TRAINING
REPUBLIC OF SOUTH AFRICA

NATIONAL CERTIFICATE
INDUSTRIAL INSTRUMENTS N5
TIME: 3 HOURS
MARKS: 100

INSTRUCTIONS AND INFORMATION

1. Answer all the questions.
2. Read all the questions carefully.
3. Number the answers according to the numbering system used in this question paper.
4. Start each section on a new page.
5. Use only a black or a blue pen.
6. Write neatly and legibly.

Copyright reserved

SECTION A

QUESTION 1

1.1 Define or explain the following:

1.1.1 Turbulent flow

1.1.2 Specific gravity

1.1.3 Viscosity

1.1.4 Acidic solution

1.1.5 Inherent control

(5 × 2) (10)

1.2 Give ONE word or a term for each of the following descriptions. Write only the word or term next to the question number (1.2.1–1.2.5) in the ANSWER BOOK.

1.2.1 It is an irregular movement of fluid made up of many smaller currents swirling and moving in all directions.

1.2.2 It is defined as the action of the controller where the magnitude (size) of the output signal is equal to the (size) of the measured deviation.

1.2.3 An instrument used to measure the specific gravity of liquids.

1.2.4 It is defined as the measure of a fluid internal resistance to shear force.

1.2.5 An apparatus that measures humidity.

(5 × 2) (10)

1.3 Indicate whether the following statements are TRUE or FALSE by writing only 'True' or 'False' next to the question number (1.3.1–1.3.5) in the ANSWER BOOK.

1.3.1 Inferential flowmeters are placed directly into the flow and measures the rate of flow.

1.3.2 Ultrasonic flowmeters operate on the principle of measuring the velocity of sound as it passes through the fluid flowing in a pipe.

1.3.3 Derivative action time is defined as the time it takes for the proportional action to repeat the derivative action.

1.3.4 Expansibility factor for flow has the value of more than one for incompressible fluids.

Copyright reserved

1.3.5 In a falling-ball viscometer measurement is made by timing the accurately calibrated distance between two marks on the glass tube. (5 × 1) (5)

[25]

TOTAL SECTION A: 25

SECTION B

QUESTION 2: FLOW MEASUREMENTS

2.1 Name THREE types of weirs. (3)

2.2 Define, with the aid of a neat sketch, each of the four energies existing in a pipeline. (6)

2.3 Calculate the rate of flow in a rectangular weir with a width of 2 m and a head of 750 mm. Take the discharge coefficient as 0,76. (4)

2.4 In 1963 the first ultrasonic flowmeter was developed for an industrial application. This meter operates on the principle of measuring the velocity of sound as it passes through the fluid flowing in a pipe.

2.4.1 Make a neat labelled sketch of an ultrasonic flowmeter. (4)

2.4.2 Give TWO advantages and TWO disadvantages of the meter in QUESTION 2.4.1. (4)

[21]

QUESTION 3: DENSITY, HUMIDITY AND VISCOSITY

3.1 Briefly explain the operating principle of a balanced flow vessel for measuring specific gravity and density. (5)

3.2 Electrodeless conductivity systems can be used for measurement of slurries and very conductive or corrosive solutions.

3.2.1 Make a neat labelled sketch of an electrodeless conductivity system. (7)

3.2.2 Name THREE applications of this system. (3)

3.3 Make a neat, labelled sketch of a nuclear moisture gauge hygrometer. (7)

[22]

Copyright reserved

QUESTION 4: pH MEASUREMENT

4.1 Study FIGURE 1 below and answer the questions that follow.

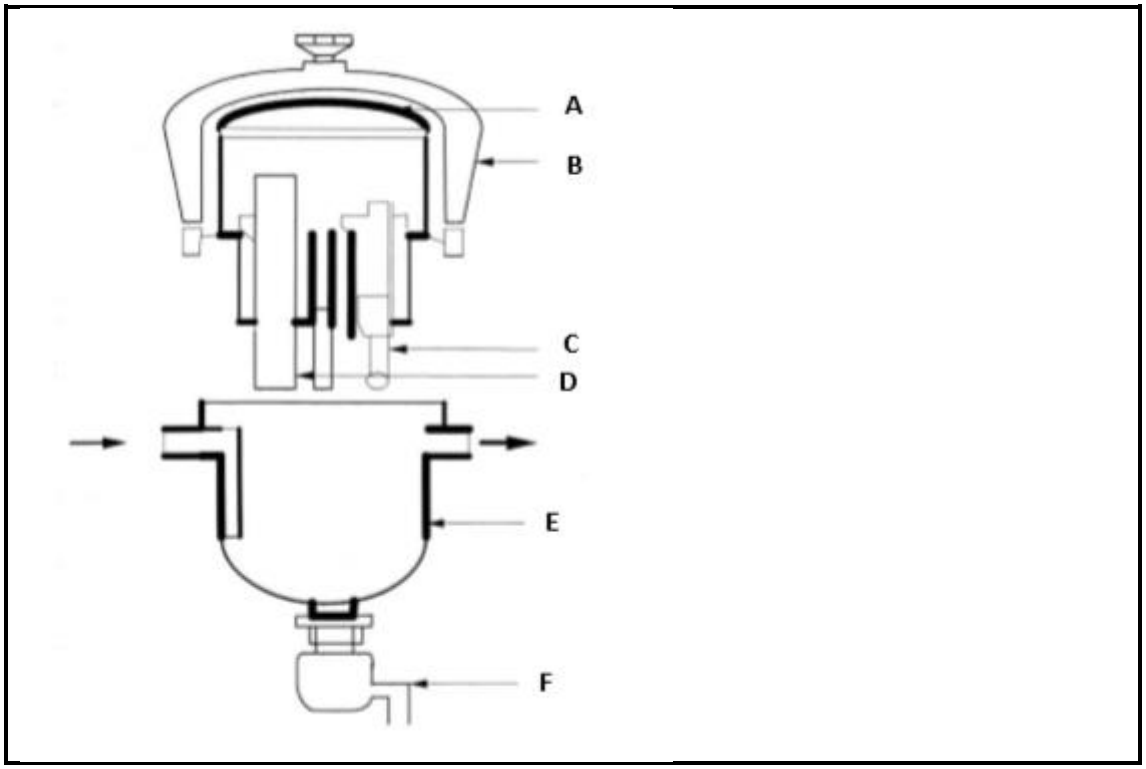

FIGURE 1

4.1.1 Name components A to F shown in FIGURE 1. (6)

4.1.2 What type of electrode systems is shown in the FIGURE 1 above?. (2)

4.2 Calculate the pH value of a solution with a hydrogen-ion concentration of $4,6 \times 10^{-8}$. Comment on the alkalinity or acidity of the solution. (4)

[12]

QUESTION 5: AUTOMATIC CONTROL

5.1

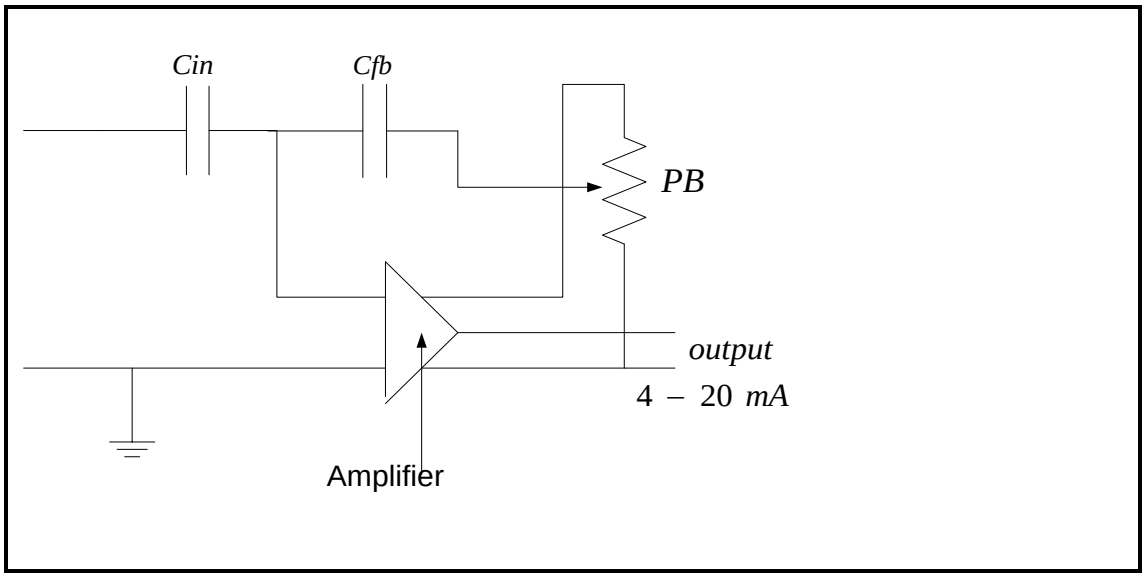

FIGURE 2

5.1.1 What type of controller is illustrated in FIGURE 2 above? (1)

5.1.2 Explain the TWO outputs from the amplifier. (2)

5.1.3 Explain the condition of this circuit with no input signal. (3)

5.1.4 Explain the condition if an error signal is impressed on the input. (4)

5.2 Explain *controller sensitivity*. (3)

5.3 Define or explain what is meant by a *closed loop control*. (3)

5.4 Describe *process lag* with the aid of sketch. (4)

[20]

TOTAL SECTION B: 75
GRAND TOTAL: 100

Copyright reserved

(8080205)

INDUSTRIAL INSTRUMENTS N5

FORMULA SHEET

$$Q = \frac{8}{15} \quad Tan \frac{\theta}{2} \sqrt{2g.H^5}$$

$$Q = \frac{2}{3} \; B\,C\sqrt{2g.H^3}$$

$$Q = \frac{2}{3} \; CB\sqrt{2g.H^3}$$

pH = -log[H^+]

pOH = -log [OH^-]

Copyright reserved