higher education & training

Department:
Higher Education and Training
REPUBLIC OF SOUTH AFRICA

MARKING GUIDELINE

NATIONAL CERTIFICATE

INDUSTRIAL INSTRUMENTS N5

7 December 2023

This marking guideline consists of 7 pages.

Copyright reserved

SECTION A: FLOW MEASUREMENTS

QUESTION 1

1.1 1.1.1

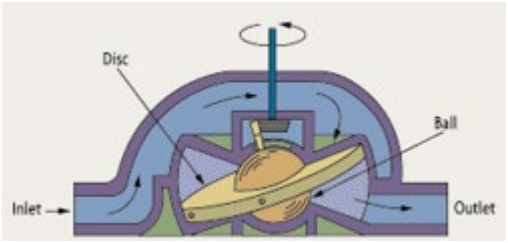

(4)

1.1.2 Advantages

- Relatively low cost
- Acceptable pressure loss
- Several construction materials available

Disadvantages

- Limited to pipe size and capacity
- Not 100% accurate
- Only clean fluids can be measured (6)

1.2 1.2.1 F
1.2.2 E
1.2.3 A
1.2.4 D
1.2.5 C
1.2.6 B

(6 × 1) (6)
[16]

QUESTION 2

2.1

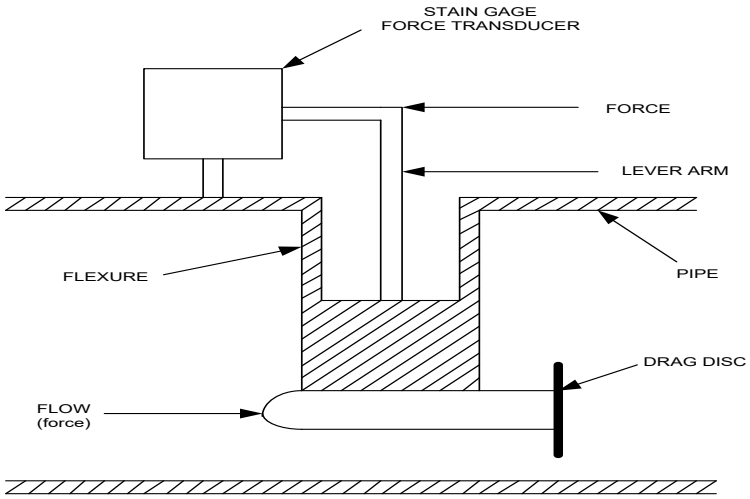

✓✓✓

A drag-body flow meter which detects the impact forces by a strain gungy circuitry.✓ The difference between the target and drag-body is that the drag body flow meter has only an electrical output.✓✓ (6)

2.2 Advantages

- Measures liquids, gases and vapours
- Connections do not freeze
- Can be used for high temperatures
- Less sensitive to change in Reynolds number
- Very accurate

Disadvantages

- Can only be zeroed under no-flow conditions.
- In-line mounting requirement. (7)

[13]

TOTAL SECTION A: 29

SECTION B: DENSITY, HUMIDITY AND VISCOSITY MEASUREMENT

QUESTION 3

3.1

- Temperature
- Pressure
- Flow composition (3)

3.2

- Hand held hydro meters are most widely used devices for determining the specific gravity of relatively transparent liquids.✓✓
- The meter displaces a volume of the unknown liquid✓ until an equilibrium is reached between upward buoyant force and downward hydro meter force.✓

- By suitable graduation, calibration with known fluids and the addition of lead-pellet weights,✓ the scale beading is calibrated to read either specific gravity or some related unit.✓ (6)

3.3 3.3.1 Dry reference gas is obtained by drying part of the sample gas in an integral dryer, or an external source of dry air or nitrogen can be connected. Two solenoid valves placed upstream of the measuring cell switch the sample and reference gases from one crystal to the other. Sample gas flow to each crystal is regulated although small variations of sample flow rate will not affect the measurement. For samples near atmospheric pressure, a vacuum pump is required to draw the sample through the measuring cell. (4)

3.3.2 The instrument is unable to measure moisture in liquid phase samples. For this reason, the instrument is applicable to only those liquid samples which can be completely vaporised within the operating limits of the instrument. In addition, monometers with a strong tendency to combine, such as butadiene and styrene, may coat the crystals and prevent proper operation. (3)

3.4

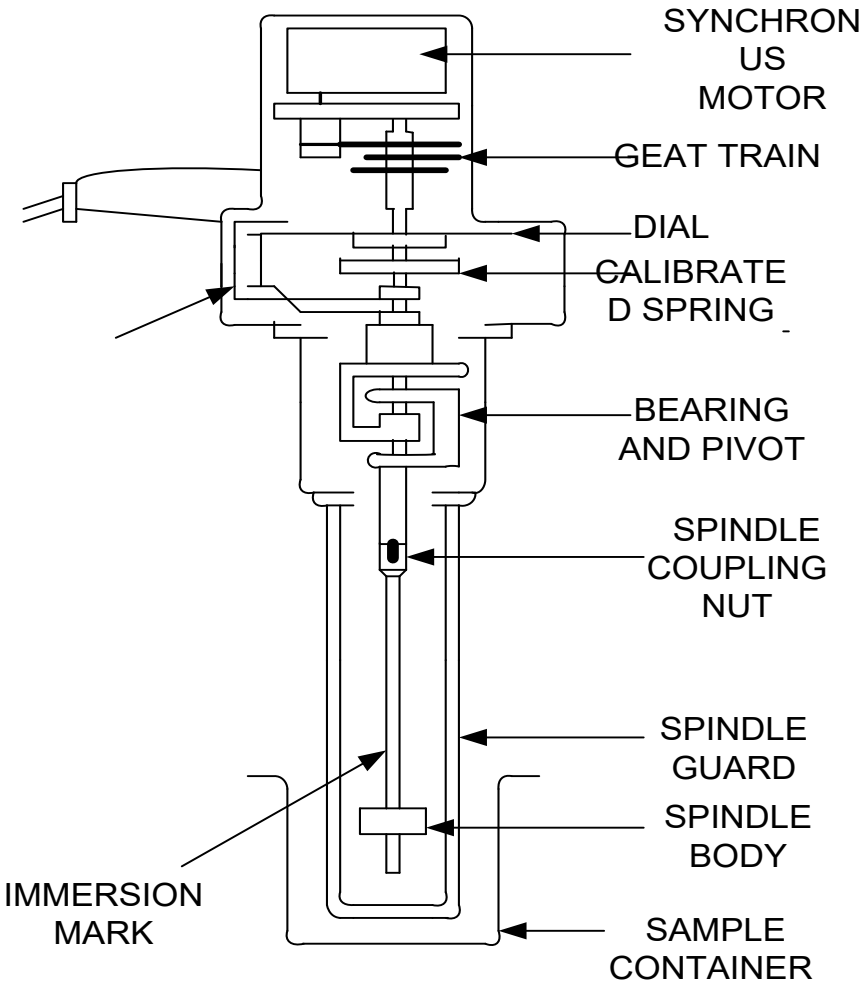

(10)

3.5

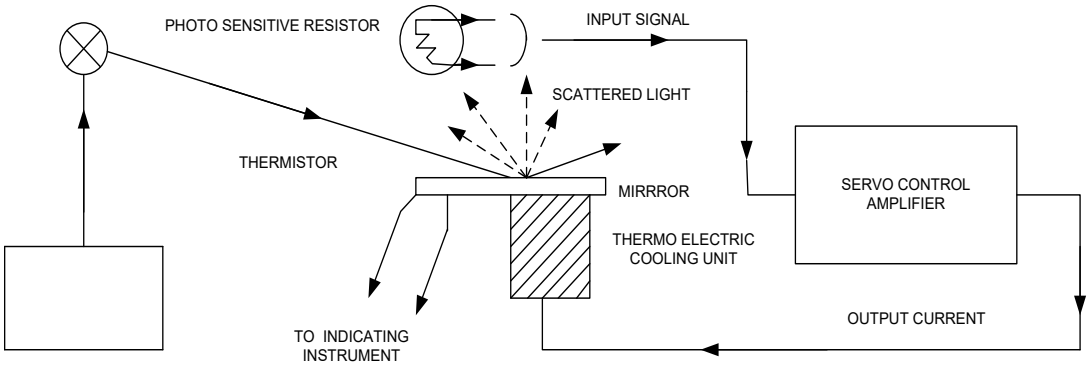

(7)
[33]

QUESTION 4: pH AND CONDUCTIVITY MEASUREMENT

4.1
- The instrument must substantially free from errors caused by supply voltage or frequency variation
- The zero reading must be stable over long period
- The current taken from the electrode system must be extremely small to avoid polarisation effects
- The design must include compensation for variation in characteristics of the components
- Temperature compensation must be included, either manually or automatically
- Facilities to be included for easy checking of calibrations (6)

4.2
- Temperature
- Mixture and reaction rates
- Electrode surface conditions (3)

4.3

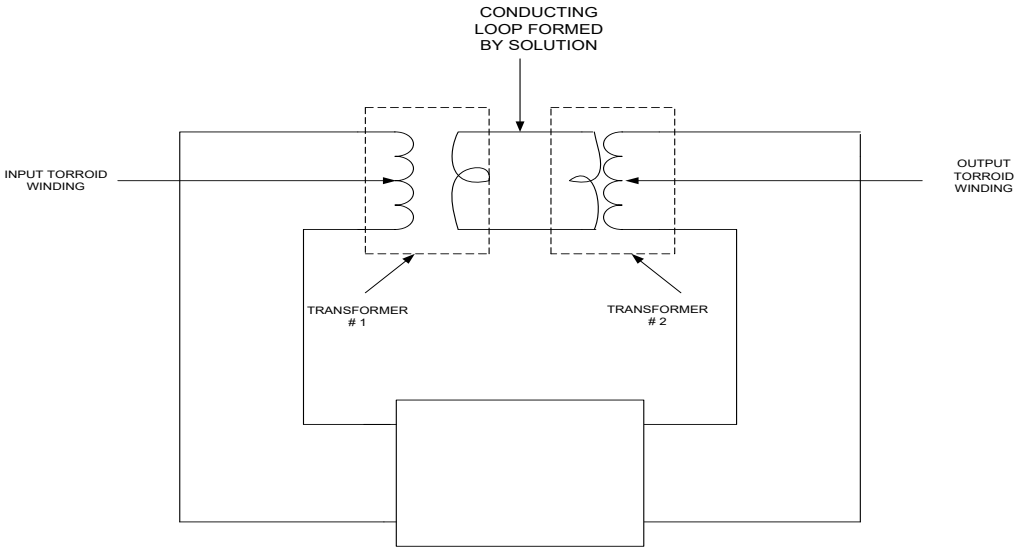

(8)
[17]

QUESTION 5: AUTOMATIC CONTROL

5.1
- Measurement
- Comparison
- Adjustment (3)

5.2 5.2.1

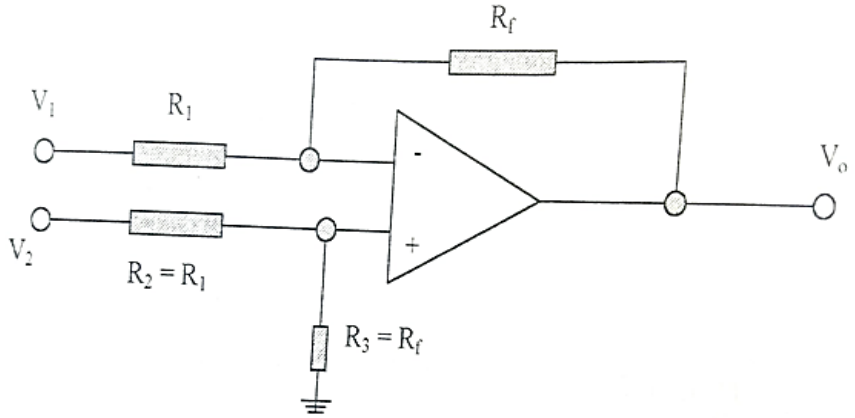

(4)

5.2.2
- Wheatstone bridge
- Linear variable differential transformer
- Linear variable capacitive transducer (Any 2 × 1) (2)

5.3
1) C
2) A
3) B (3 × 2) (6)

5.4
5.4.1 outputs
5.4.2 current signal
5.4.3 voltage signal
5.4.4 halfway
5.4.5 error
5.4.6 potential
5.4.7 amplifier
5.4.8 counteract
5.4.9 original
5.4.10 feedback voltage
5.4.11 proportional band
5.4.12 proportional control

(12 × ½) (6)
[21]

TOTAL SECTION B: 71
GRAND TOTAL: 100

Copyright reserved