higher education & training

Department:
Higher Education and Training
REPUBLIC OF SOUTH AFRICA

MARKING GUIDELINE

NATIONAL CERTIFICATE

INDUSTRIAL INSTRUMENTS N5

1 December 2022

This marking guideline consists of 6 pages.

Copyright reserved

SECTION A

QUESTION 1

1.1 1.1.1 It is the irregular movement of fluid made up of smaller currents, swirling and moving in all directions.

1.1.2 Is the number of times the mass of any value of a substance is greater than the mass of the same value of water under the same temperature and pressure.

1.1.3 The measure of a fluid's internal, or intermolecular resistance.

1.1.4 When the number of hydrogen ions exceeds the number of hydroxyl ions.

1.1.5 It is a balanced condition in a system without a controller.

(5 × 2) (10)

1.2 1.2.1 Turbulent flow
1.2.2 Proportional control
1.2.3 Hydrometer
1.2.4 Viscosity
1.2.5 Hygrometer

(5 × 2) (10)

1.3 1.3.1 True
1.3.2 True
1.3.3 True
1.3.4 False
1.3.5 True

(5 × 1) (5)
[25]

TOTAL SECTION A: 25

SECTION B

QUESTION 2: FLOW MEASUREMENTS

2.1
- V-notch weir
- Rectangular weir
- Trapezoidal/Cipoletti weir
- Parabolic weir
- Suppressed weir
- Hyperbolic weir
- Compound weir

(Any 3 × 1) (3)

2.2

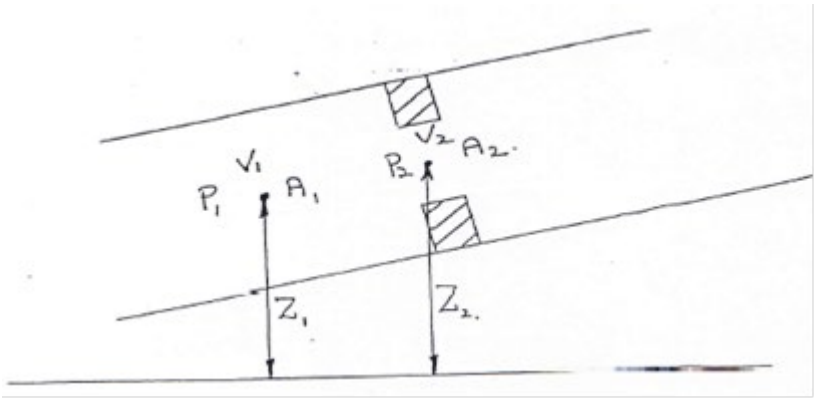

✓✓

- Potential energy: mgh✓
- Kinetic energy: 1/2 mv^2✓
- Pressure energy: PV✓
- Internal energy: I✓

(6)

2.3 $Q = \frac{2}{3}BC\sqrt{2gH^3}$

$= \frac{2}{3} \times 2 \times 0{,}76 \times \sqrt{2 \times 10 \times 0{,}75^3}$✓✓

= 2,943 m³/h✓✓ (4)

2.4 2.4.1

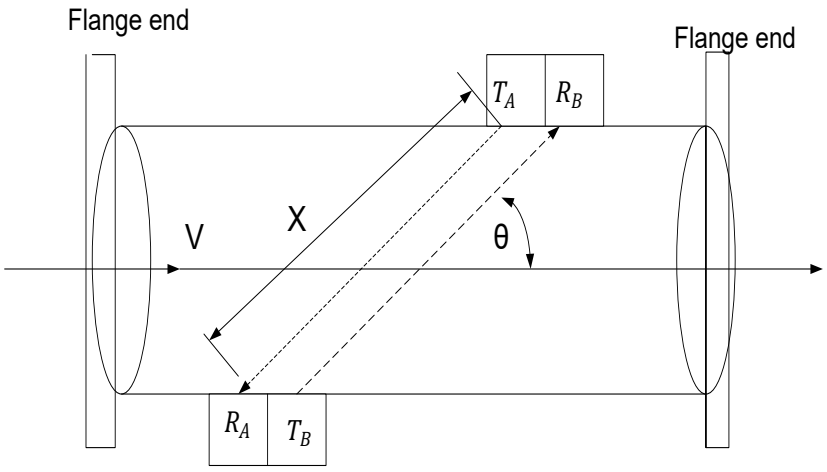

(4)

2.4.2 Advantages
- No pressure loss
- Can be used with liquids, gasses and solids
- Bi-directional
- Very accurate
- Pipe diameter has no effect (Any 2 × 1)

Disadvantages
- Expensive
- Limited range (4)

[21]

QUESTION 3: DENSITY, HUMIDITY AND VISCOSITY

3.1
- A fixed-volume vessel is used through which the measured liquid flows continuously.
- This vessel is weighed automatically by a scale, spring balance, or pneumatic force-balance transmitter.
- Since the weight of a definite volume of the liquid is known, the instrument can be calibrated to read directly in specific gravity or density units.
- Either open or closed vessels with flexible connections can be used.
- High-accuracy measurement results; this is especially useful for automatic density control. (5)

3.2 3.2.1

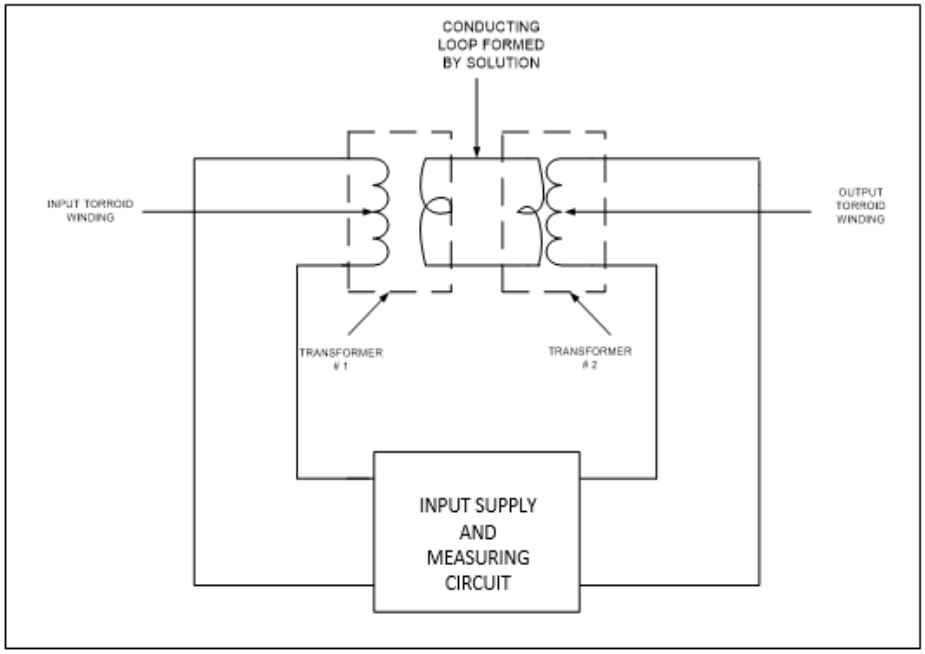

(7)

3.2.2
- Strong mineral acid and bases
- Abrasive slurries
- Material containing entangling fibres (3)

3.3

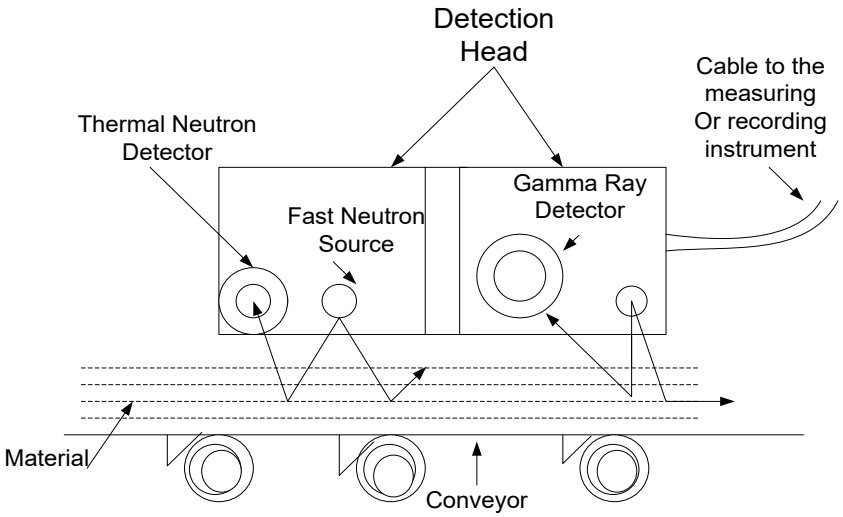

(Each labelling count a mark) (7)
[22]

QUESTION 4: pH MEASUREMENT

4.1 4.1.1 A – Removable cover
B – Cover clamp
C – Glass electrode
D – Reference electrode
E – Removable bowl
F – Drain tap (6)

4.1.2 Flow type pH electrode assembly (2)

4.2 $pH = -\log[H^+]$
$= -\log (4{,}6 \times 10^{-8})$✓
$= 7.337$✓✓
The solution is basic, because the pH value is greater than seven.✓ (4)
[12]

QUESTION 5: AUTO CONTROL

5.1 5.1.1 Proportional electronic controller (1)

5.1.2
- Current signal ranging from 4 to 20 mA for control purpose
- Voltage signal of ±4 volts for feedback purposes (2)

5.1.3 With no input signal, the feedback voltage is zero✓ and the potential at point A, relative to ground, is zero✓ There will be an output signal of the halfway value between 4 mA and 20 mA.✓ (3)

5.1.4 The capacitor C_{in} is charged and a potential appears at point A,✓ forming an input signal to the amplifier.✓ A feedback voltage is generated to C_{fb} to counteract this✓ and the potential at A returns to zero.✓ (4)

5.2 That is the percentage of proportional band.✓ The smaller the band the more sensitive the output.✓ The bigger the band, the output becomes slower.✓ (3)

5.3 It is a combination of control units in which the process variable is measured and compared with the desired value or set-point.✓ If the measured value differs from the desired value, a corrective signal✓ is sent back to the final control element to bring the controller variable to the proper value.✓ (3)

5.4

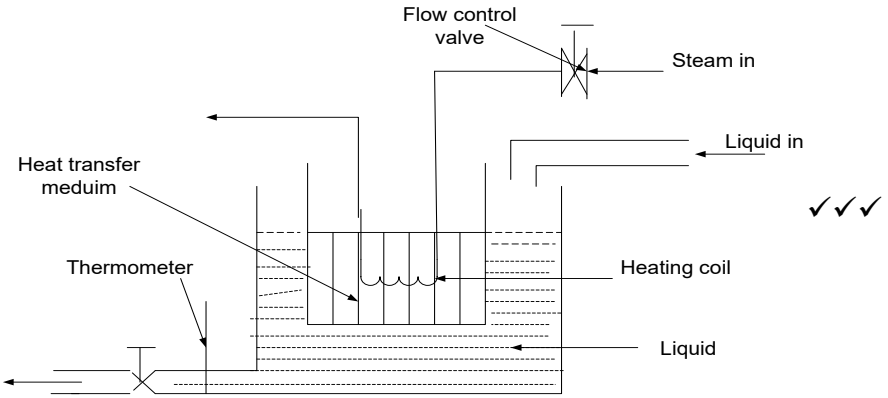

✓✓✓

Process lag is the time taken for the water to reach the temperature of steam✓

OR

The time taken for a process to rectify the deviation (4)
[20]

TOTAL SECTION B: 75
GRAND TOTAL: 100

Copyright reserved