higher education & training

Department:
Higher Education and Training
REPUBLIC OF SOUTH AFRICA

NATIONAL CERTIFICATE

BUILDING AND STRUCTURAL CONSTRUCTION N5

(8060015)

30 November 2022 (X-paper)
09:00–13:00

REQUIREMENTS: **Answer book (8/13)**
A2 drawing sheet
Hot-rolled steel sections (BOE 8/2)

Nonprogrammable calculators may be used.

This question paper consists of 5 pages, 2 diagram sheets, an annexure, and a formula sheet.

298Q1E2230

Copyright reserved

DEPARTMENT OF HIGHER EDUCATION AND TRAINING
REPUBLIC OF SOUTH AFRICA

NATIONAL CERTIFICATE
BUILDING AND STRUCTURAL CONSTRUCTION N5
TIME: 4 HOURS
MARKS: 100

INSTRUCTIONS AND INFORMATION

1. Answer all the questions.
   Questions 1, 2 and 3 must be answered in the ANSWER BOOK.
   Questions 4, 5 and 6 must be answered on the supplied drawing paper.

2. Read all the questions carefully.

3. Number the answers according to the numbering system used in this question paper.

4. All drawings must be done in pencil with bold outlines.

5. The drawings must be done in accordance with National Standards and must be fully labelled with descriptive notes and dimensions (where applicable).

6. All calculations must conform to the relevant SABS/SANS Code of Practice.

7. Write neatly and legibly.

Copyright reserved

QUESTION 1

FIGURE 1, DIAGRAM SHEET 1 (attached) shows a TWO-pitch steel truss supported on TWO I-section parallel steel beams. The roof truss must support THREE point loads and ONE 30 kN wind load.

Use the graphical or analytical method to obtain the magnitude and direction of the forces in each of the members to distinguish between the tie and the strut forces.

Tabulate your answers.

The graphical method must be done on the supplied A2 drawing paper.

Use the following scales (Graphical method) : Space diagram: 120 mm = 3 m
Vector diagram: 1 mm = 1 kN

[18]

QUESTION 2

FIGURE 2 shows a bolted connection between a tie-bar and a gusset plate consisting of SIX M12 Grade-4 bolts. Calculate the following:

2.1 The resistance of the bolts to shearing. (4)

2.2 The resistance of the bolts to crushing. (3)

2.3 The resistance of the tie to tearing. (4)

2.4 The maximum force that the connection can safely withstand. (1)

Specifications:
Maximum shear stress of the bolts : 150 MPa
Maximum tensile stress of the tie : 200 MPa
Maximum compressive stress of the bolts : 260 MPa

[12]

QUESTION 3

FIGURE 3, DIAGRAM SHEET 1 (attached) shows a steel beam supported on TWO reactions, 9 metres apart, with overhangs at both sides of the steel beam.

Select a suitable I-section parallel flange steel beam to ensure that the building is safe. Give the following:

3.1 The values of the reactions at RL and RR. (4)

3.2 Determine the values of the shear forces and bending-moment values of the loaded beam.
NOTE: Do not draw the TWO diagrams. (7)

Copyright reserved

3.3 Calculate the section modules and select a suitable I-section tapered flange steel beam for the loaded beam from the BOE 8/2 steel tables. (4)

3.4 Calculate the maximum shear stress in the chosen steel beam. (3)

The permissible bending stress for grade 43 mild steel is 160 MPa.
The maximum shear stress must not exceed 150 MPa.

[18]

QUESTION 4

On a scale of 1:10, draw a 1 500 mm × 600 mm × 450 mm deep reinforced-concrete pile cap supporting TWO 300 mm diameter reinforced-concrete piles. The centre of the piles is set back 250 mm from the sides of the pile cap and spaced one metre apart.

The pile cap supports a 300 mm square reinforced-concrete column on the right-hand side and a 300 mm round concrete column on the left-hand side, positioned in line with the centre of the piles.

On a scale of 1:10, draw the following views:

4.1 A neat freehand isometric drawing, not to scale, to show a pictorial view of the pile cap structure. (5)

4.2 A top view of the pile cap with the columns to show the position of the steel reinforcement in the columns. Do not include the TWO piles. (7)

4.3 A vertical sectional front view through the columns, pile cap and piles with all the steel reinforcement in the correct place. (15)

Steel reinforcement specifications:
Pile cap

Main steel reinforcement	:	Y16 01–160 centres
Secondary reinforcement	:	Y16 02–160 centres
Lacer bars	:	Y16 03 (Ties the top steel to the bottom steel)
Concrete piles	:	6Y16 04 main steel reinforcement with R08 05 helical binders at 200 mm centres.
Square column	:	8Y16 06 main steel reinforcement with R08 07 binders at 150 mm centres.
Round column	:	6Y16 08 main steel reinforcement with R08 09 helical binders at 200 mm centres.

The completed views must be fully labelled and dimensioned with all the steel codes.

[27]

Copyright reserved

QUESTION 5

Draw to scale of 1:5 a vertical cross section through a one-brick wall supporting a reinforced-concrete floor slab.

The external wall is a face brick wall and the inside wall is plastered.

The 150 mm deep reinforced-concrete slab is built 110 mm into the wall. The underside of the slab must be plastered. The floor is finished with 150 × 150 mm clay tiles and 75 × 22 mm timber skirting.

Slab reinforcement : Y12–250 centres main steel reinforcement with R08-200 centres.

The competed drawing must show all construction details and be fully dimensioned and labelled.

[14]

QUESTION 6

On a scale of 1:10, draw an isometric view of a steel stanchion, base plate and TWO flange plates. The stanchion must be welded to the base plate and the TWO flange plates must be welded to the base plate and column flanges.

Specifications:

Steel stanchion	:	254 × 254 × 72,9 kg/m H-section parallel flange.
Base plate	:	530 × 530 × 25 mm thick
Flange plates	:	8 mm thick
Bolt holes	:	26 mm diameter for M20 bolts. 50 mm in from the corners of the base plate. Do not show the bolts.
Welding	:	6 mm fillet welds

[11]

Show the flange and flange plate on the left-hand side and the web on the right-hand side.

Complete the drawing in bold outlines. Do not add any labels or dimensions, but include welding symbols at the bottom of the flange plate and of the steel column.

TOTAL: 100

Copyright reserved

DIAGRAM SHEET 1

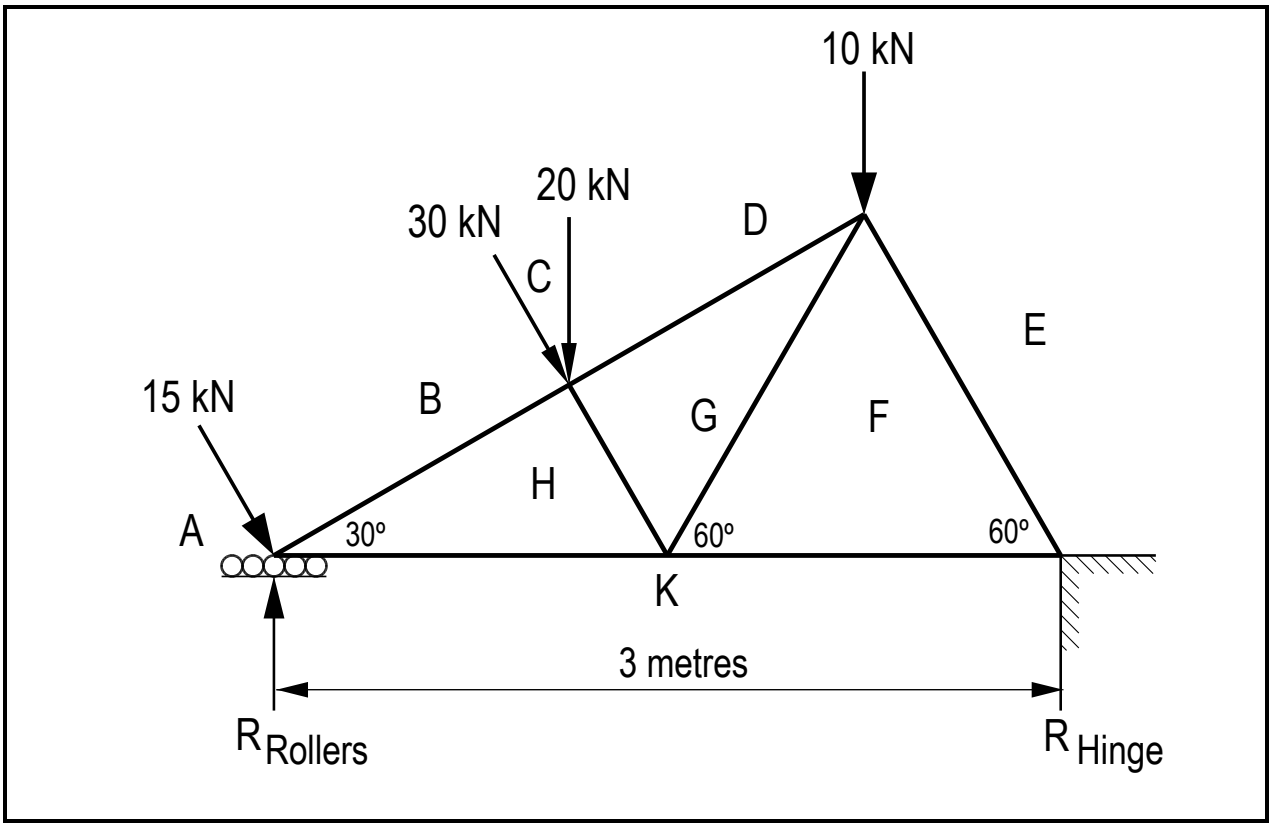

FIGURE 1

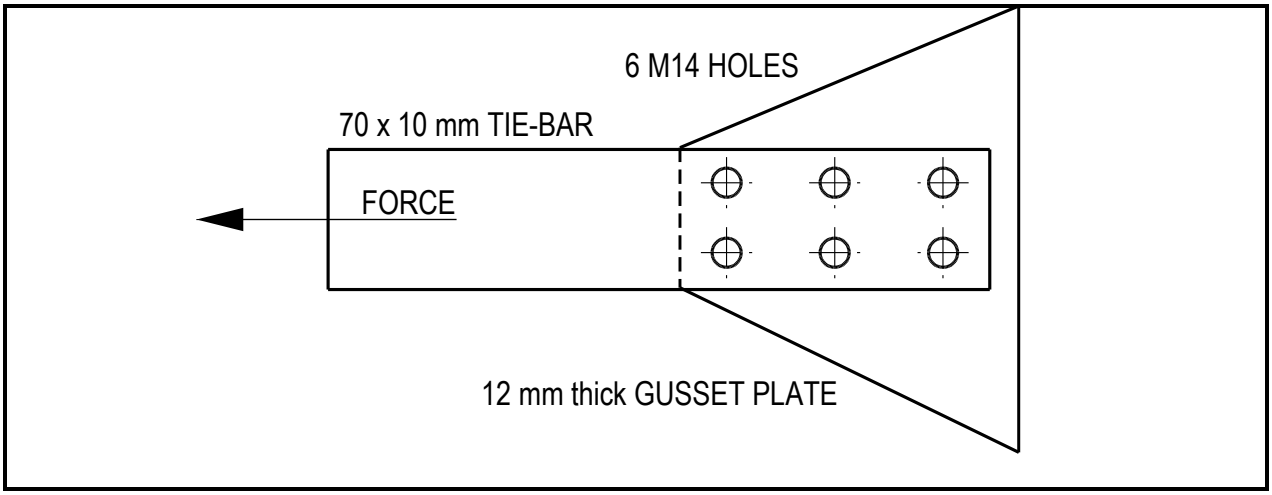

FIGURE 2

Copyright reserved

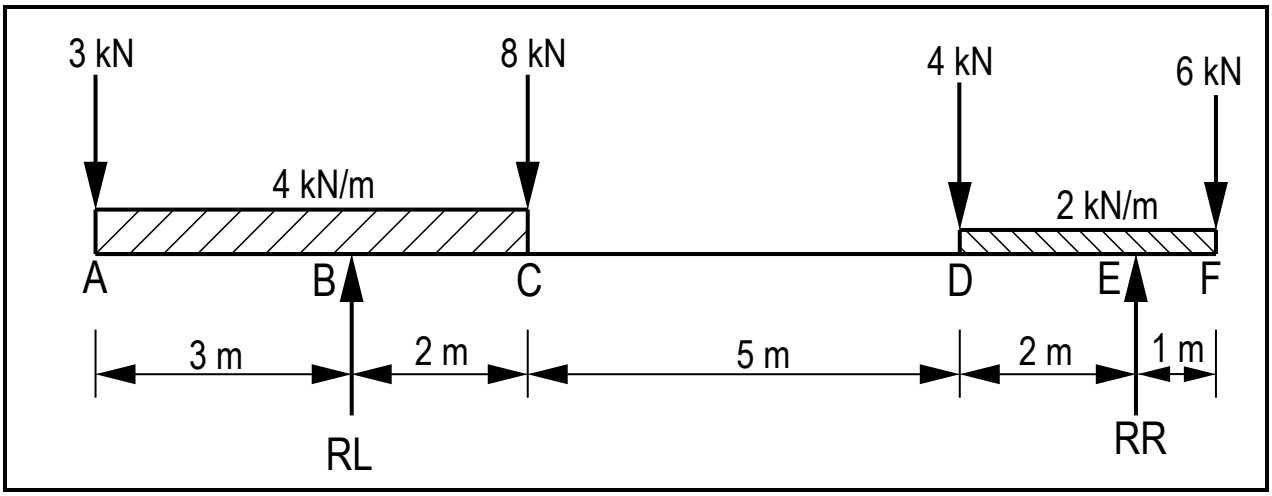

FIGURE 3

Copyright reserved

ANNEXURE

SANS 282 Summary of Shape Codes

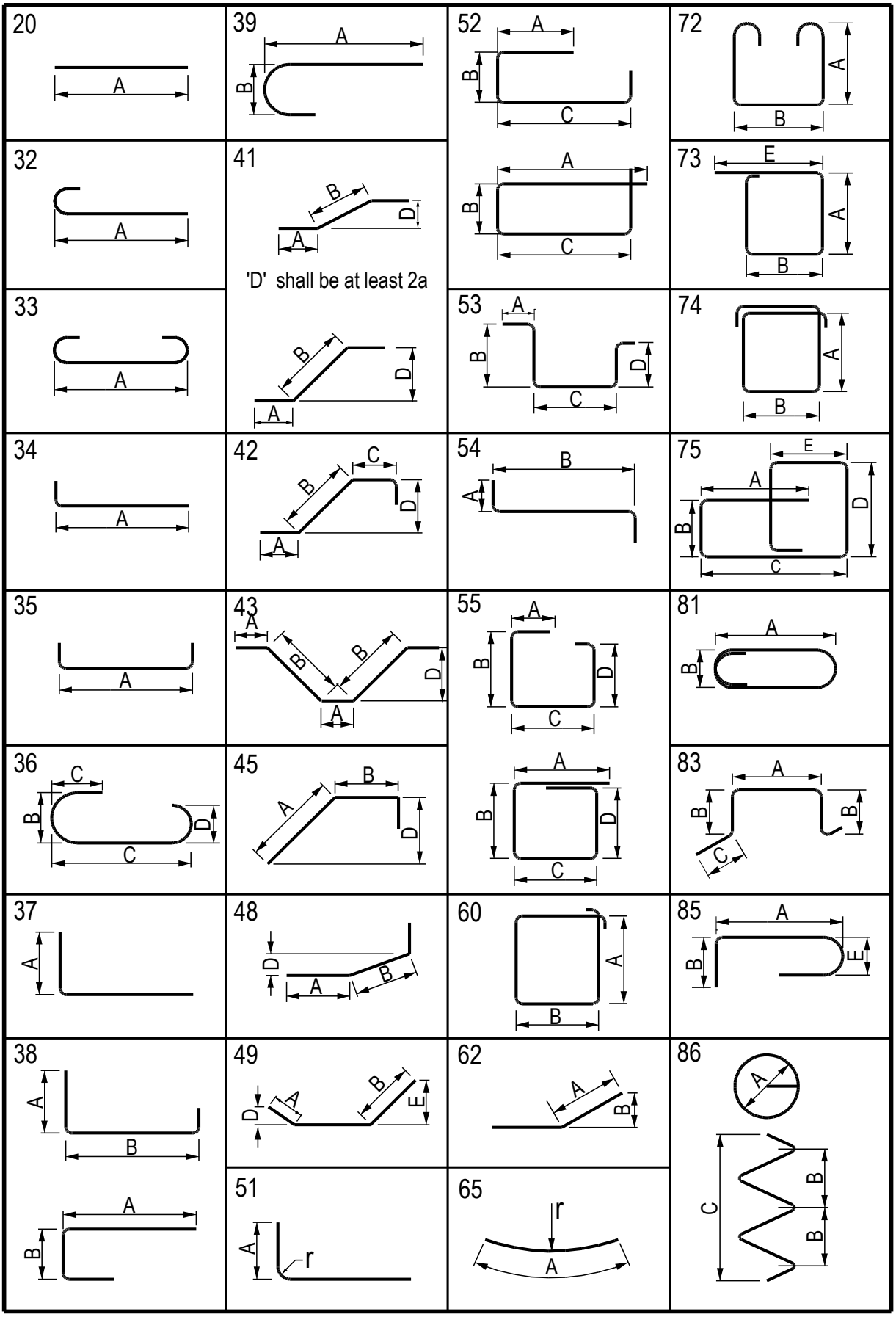

Copyright reserved

BUILDING AND STRUCTURAL CONSTRUCTION N5

FORMULA SHEET

Any other applicable formula is also accepted.

$A = ½\ bh$

$A = \frac{\pi d^2}{4}$

$\sum CWM = \sum ACWM$

$\sum \uparrow F = \sum \downarrow F$

$Moment = Force\ x\ distance$

$BM = Reaction\ moment - Load\ moment$

$\frac{m}{I} = \frac{f}{y}$

$Z = \frac{I}{y}$

$I_{xx} = \frac{bd^3}{12}$

$I_{xx} = \frac{bd^3}{36}$

$I_{xx} = \frac{bd^3}{12} + al^2$

$F_s = A_s\ x\ f_s\ x\ n$

$F_t = A_t\ x\ f_t\ x\ n$

$F_c = A_c\ x\ f_c\ x\ n$

$A_s = \frac{\pi d^2}{4}$ $\quad$ $A_s = \frac{\pi(\emptyset - 0{,}9382\ p)^2}{4}$

$A_t = [(B\ x\ T) - n\ (d\ x\ t)]$

$A_c = (d\ x\ t)$

$HC = F\ x \cos \theta$

$R = \sqrt{VC^2 + HC^2}$

$VC = F\ x \sin\ \theta$

$D = \frac{Mass}{Volume}$

$W = mass\ x\ ga$

$Stress = \frac{Load}{Area}$

$Z = \frac{m}{f}$

$X = \frac{\sum Ax}{\sum A}$

$I_{yy} = \frac{db^3}{12}$

$I_{xx} = \frac{\pi D^4}{64}$

$I_{xx} = \frac{BD^3}{12} - \frac{bd^3}{12}$

Copyright reserved