higher education & training

Department:
Higher Education and Training
REPUBLIC OF SOUTH AFRICA

MARKING GUIDELINE

NATIONAL CERTIFICATE

BUILDING AND STRUCTURAL CONSTRUCTION N5

30 NOVEMBER 2022

This marking guideline consists of 12 pages.

Copyright reserved

QUESTION 1

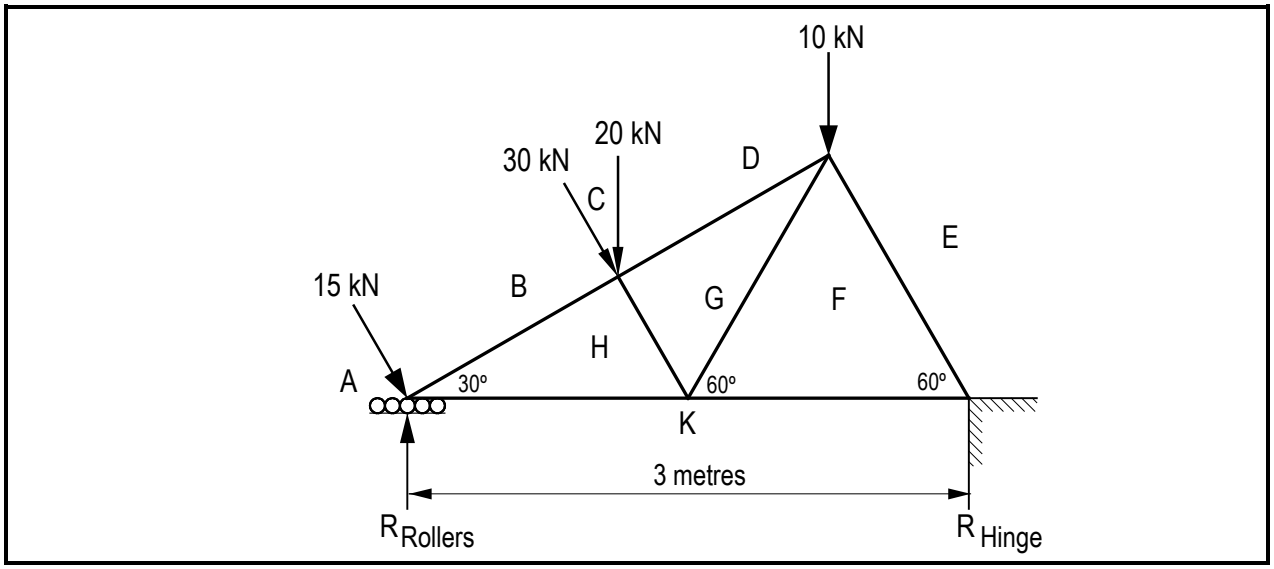

Calculate the Reactions

Take moment around RR
(RH × 3) = (30 Cos 60° × 1,125) + (10 × 2 ,25) + (20 × 1,125) + (30 Cos 60° × 0,65)

RH = 27,993 kN✓

Take moment around RH
(RR × 3) + (30 Cos° 60 × 0,65) = (20 × 1,875) + (30 Cos° 60 × 1,875) + (10 × 0,75) + (15 Cos 60° × 3)

RR = 40,978 kN ✓ (2)

RR is on rollers, thus the force is vertical up = 40,978 kN
But RL is fixed; thus we use Pythagoras to find the Resultant or Equilibrium F

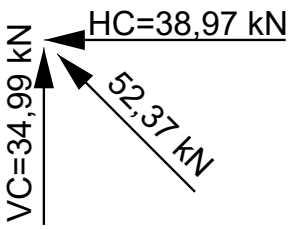

RL = $\sqrt{\Sigma\ VC^2 + \Sigma\ HC^2}$

Horizontal Comp
30 Cos 60° + 15 Cos 60° = F
F= 22,5 kN

RL = $\sqrt{\Sigma\ 27{,}993^2 + \Sigma\ 22{,}5^2}$

Direction:
$Tan\ \theta\ = \frac{27{,}993}{22{,}5}$

θ **= 51,208°✓** (4)

Calculate the force in each member

Find member BH

40,978 + BH Sin 30° = 15 Sin 60°

BH = 15 sin 60° – 40,978 / Sin 30°

BH = 55,98 KN (Strut)✓✓

Find member HK

BH Cos 30° = 15 Cos 60° + HK

55,98 Cos 30° = 15 Cos 60° + HK

HK = 55,98 Cos 30° – 15 Cos 60°

HK = 40,98KN (Tie)✓✓

Find member EF

EF Sin 60° = 36 Sin 51°

EF = 28 / Sin 60°

EF =32,33 KN (Strut)✓✓

Find member FK

FK + FE Cos 60° = 36 Cos 51°

FK + 32,33 Cos 60° = 36 Cos 51°

FK = 32,33 Cos 60° + 36 Cos 51°

FK = 6,7 KN (Strut)✓✓

Find member DG

DG Cos 30° + HG Cos 60° = 30 Cos 60° + 56 Cos30°

DG Cos 30° = 63, 497 – HG Cos 60°

DG = 73,32 – 0,577 HG…….{1}

DG Sin 30° + 20 + 30 Sin 60° = 56 Sin 30° + HG Sin 60°

DG Sin30 + 45,98 = 28 + 0,866 HG

0,5 (73,32 – 0,577HG) + 45,98 = 28 + 0,866 HG

36,66 – 0,289 HG + 45,98 = 28 + 0,866 HG

82,64 – 0,289 HG = 28 + 0,866 HG

82,64 – 28 = 0,866 HG + 0,289 HG

54,64 = 1,155 HG

HG = 47 kN (Strut)✓✓

And:

DG = 73,32 – 0,577 HG…….{1}

DG = 73,32 – 0,577 (47)

DG = 46 kN (Strut)✓✓

Copyright reserved

Find member FG

HG Sin60 = FG Sin60

HG = GF Sin 60 / Sin 60

HG = GF

GF = 47 kN (Tie)✓✓ (14)

[18]

QUESTION 1
(Alternative)

SPACE DIAGRAM
Linear Scale 120 mm = 3 m

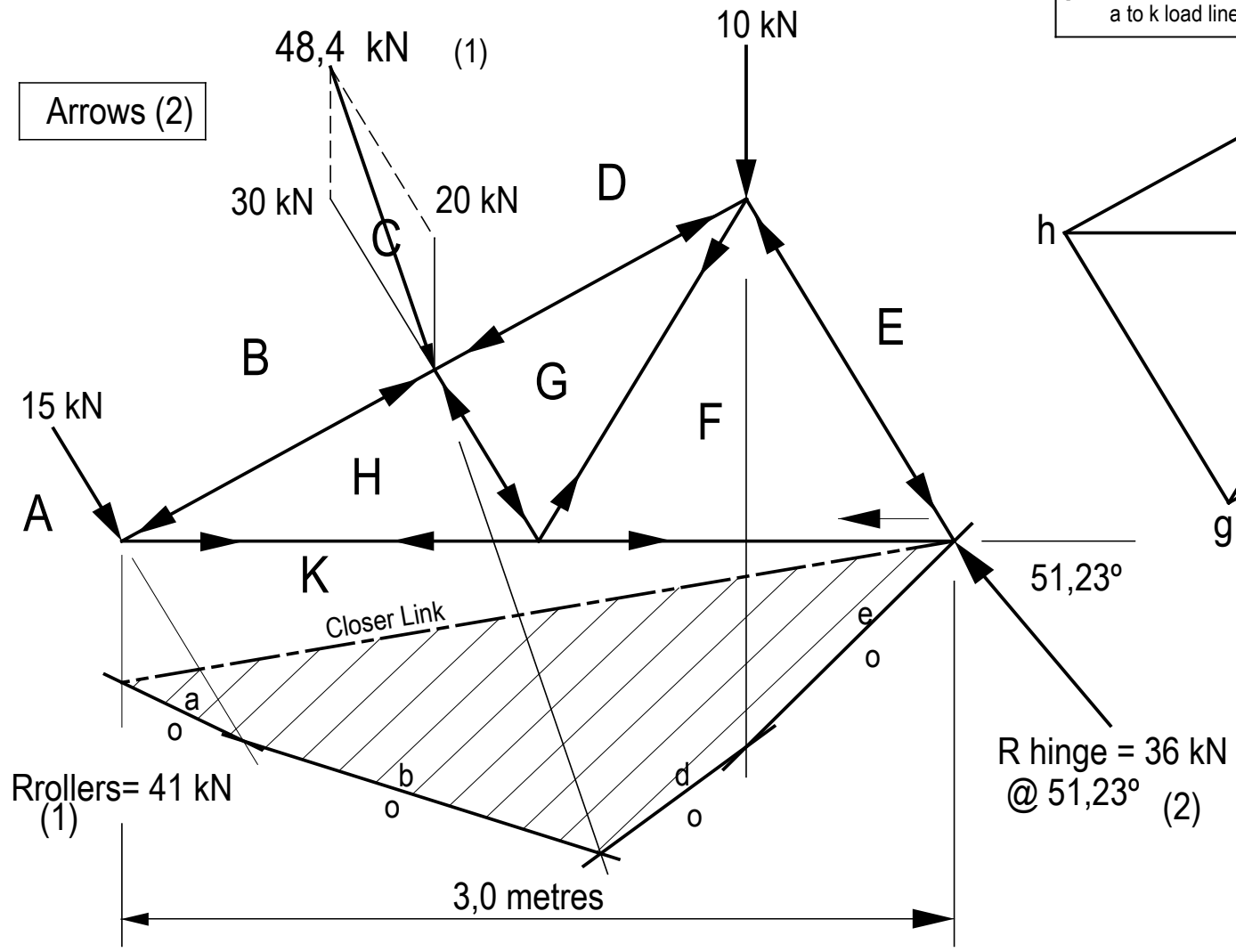

VECTOR DIAGRAM
Scale 1 mm = 1 kN

[1 mark each = 5 marks]
a to k load line

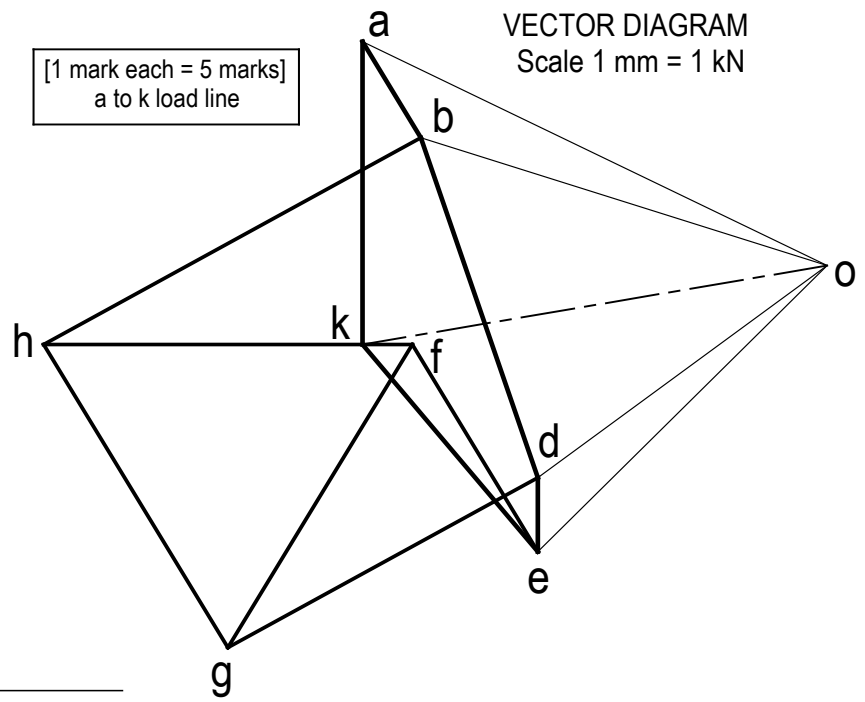

Member	Type	Magnitude	
BH	Strut (C)	56 kN	(1)
DG	Strut (C)	46 kN	(1)
EF	Strut (C)	32 kN	(1)
FG	Tie (T)	47 kN	(1)
GH	Strut (C)	47 kN	(1)
KH	Tie (T)	41 kN	(1)
KF	Tie (T)	6,49 kN	(1)

[14 x 0,5 each = 7 marks]

TOTAL MARKS = 18

Copyright reserved

QUESTION 2

2.1 Resistance force of the bolts to shearing

The screw thread is outside the shearing plane

Shear Stress = Load / Area

Load = area x stress

Force in shear $= \frac{\pi d^2}{4}$ x f_s x n ✓ (diameter = 12 mm)

$= \frac{\pi 12^2}{4}$ x 150 N/mm² x 6 ✓✓

= **101,79 kN**✓ (4)

2.2 Resistance force of the bolts to crushing

Load = area x stress

Crushing Force = (d x t) x stress x n

= (12 x 10) x 260 N/mm² x 6✓✓

Crushing Force = **187,2 kN**✓ (3)

2.3 Resistance force of the force to tearing

Load = area x stress

$F_s = A_t$ x f_t x n

Force in tearing = [(B x T) – n (d x t)] x f_t

= [(70 x 10) – 2(14 x 10)] x 200 N/mm²✓

= [(700) – 2(140)] x 200 N/mm²

= [700 – 280] x 200 N/mm²✓

= 420 x 200 N/mm²✓

Force in tearing = 84 kN✓ (4)

2.4 The maximum safe load is in tearing = 84 KN (1)

[12]

QUESTION 3

Calculate the Reactions

3.1 **Take moments about RL:**

$$(RR \times 9) + (3 \times 3) + (4 \times 3 \times 1{,}5) = (6 \times 10) + (2 \times 3 \times 8{,}5) + (4 \times 7) + (8 \times 2)$$
$$+ (4 \times 2 \times 1) \checkmark$$

$$RR = \frac{(60 + 51 + 28 + 16 + 8) - (9 + 18)}{9} \quad \left(\frac{163 - 27}{9}\right)$$ (2)

RR = 15,11 kN ✓

Take moments about RR:

$$(RL \times 9) + (6 \times 1) + (2 \times 1 \times 0{,}5) = (3 \times 12) + (4 \times 5 \times 9{,}5) + (8 \times 7) + (4 \times 2)$$
$$= (2 \times 2 \times 1) \checkmark$$

$$RL = \frac{(36 + 190 + 56 + 8 + 4) - (6 + 1)}{9} \quad \left(\frac{294 - 7}{9}\right)$$

RL = 38,89 kN✓ (2)

Calculate Shear Force values

3.2

SF A: -3 kN	-3 kN
SF B: -3 – (4 × 3)	-15 kN
SF B: -3 – (4 × 3) + 31,89	**16,89 kN MAX ✓**
SF C: 31,89 – 3 – (4 × 5)	8,89 kN
SF C: 31,89 – 3 – (4 × 5) - 8	0,89 kN ✓
SF D: 31,89 – 3 – (4 × 5) – 8	0,89 kN
SF D: 31,89 – 3 – (4 × 5) – 8 - 4	- 3,11 Kn ✓
SF E: 31,89 – 3 – (4 × 5) – 8 – 4 – (2 × 2)	- 7,11 kN
SF E: 31,89 – 3 – (4 × 5) – 8 – 4 – (2 × 2) + 15,11	8 kN
SF F: 31,89 – 3 – (4 × 5) – 8 – 4 – (2 × 2) + 15,11	6 kN

(3)

Calculate Bending Moment values

BM B: – (3 × 3) – (4 × 3 × 1,5)	-27 kNm (max)✓
BM C: (31,89 × 2) – (3 × 5) – (4 × 5 × 2,5)	-1,22 kNm✓
BM D: (31,89 × 7) – (3 × 10) – (4 × 5 × 7,5) – (8 × 5)	3,23 kNm✓
BM D: (15,11 × 2) – (6 × 3) – (2 × 3 × 1,5)	***3,22 kNm***
BM E: – (6 × 1) – (2 × 1 × 0,5)	7 kNm✓

(4)

Calculate Section Modules and select suitable I-Section tapered flange

3.3 $\text{Ze} = \frac{B\,M\,max}{Stress} = \frac{27\,x\,10^6}{160}$ ✓ $= 168\,750\ \text{mm}^3$ ✓

$\text{Ze} = 168{,}8 \text{ x } 10^{-6}\ \text{m}^3$ ✓

Select: 178 x 102 x 21,5 kg/m I-Section tapered flange ✓ ($\text{Ze} = 170{,}2 \text{ x } 10^{-6}$) (4)

Check for shear stress

3.4 $\text{Shear stress} = \frac{S\,F\,max}{D\,x\,t} = \frac{16{,}89\,x\,10^3}{177.8\,x\,5{,}3}$ ✓ $= 18\ \text{MPa}$ ✓ (2)

$\text{Ze} = 18 < 150\ \text{MPa}$ ✓ (1)

[18]

QUESTION 4.1

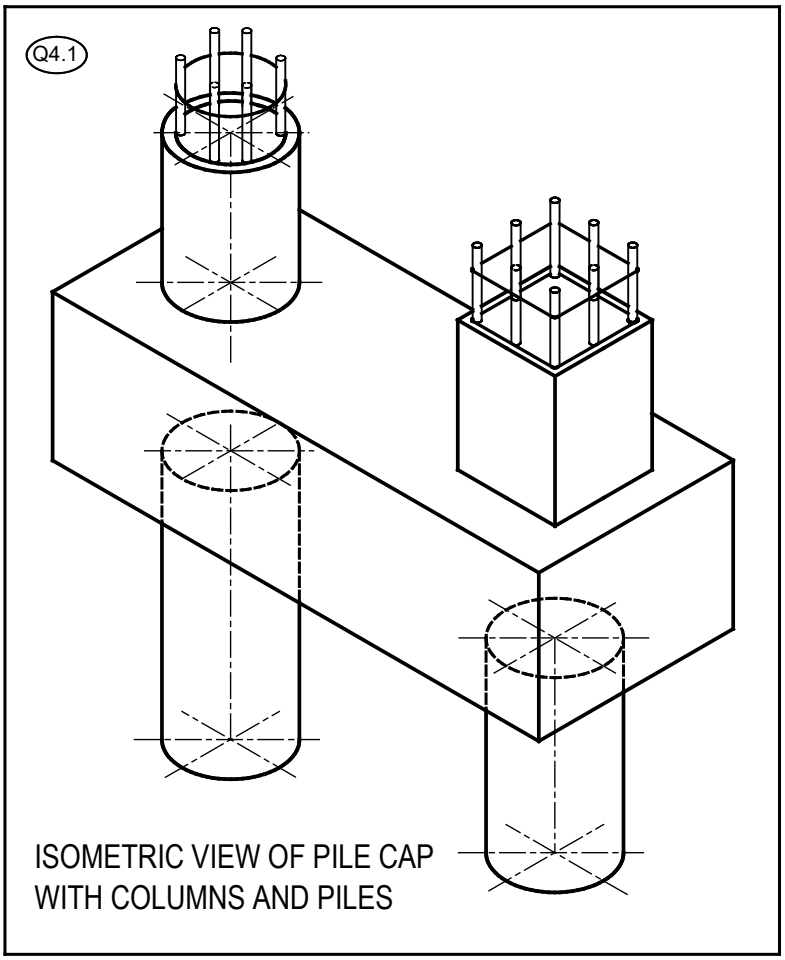

QUESTION 4.1 ISOMETRIC VIEW	
Iso freeh sketch	1
Drawn in good proportn	1
All members in place	2
All Reinforcement	1
Total	5

QUESTION 4.2 TOP VIEW	
Pile cap drawn to corr dims	1
Columns corr.	2
Column Reinforcmnt corr.	2
Dimensions	1
Title & Scale	1
Total	7

QUESTION 4.3 SECTIONAL VIEW	
Pile cap drawn to corr dims	1
Piles drawn corr.	2
Columns corr.	2
All reinforcement	5
Dimensions	2
Labels	2
Title & Scale	1
Total	15

Total = 27 marks

QUESTION 4.2 and 4.3

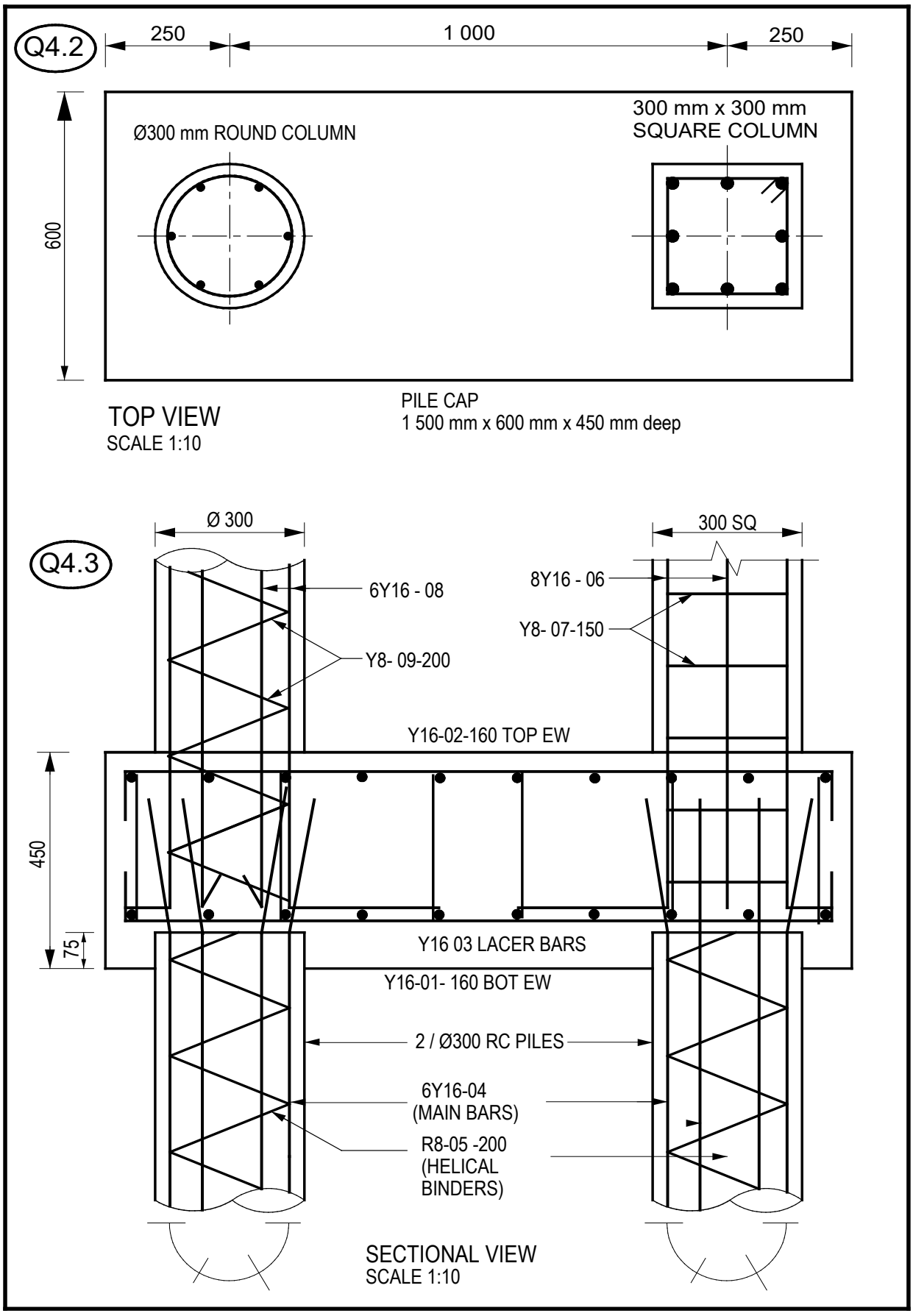

Copyright reserved

QUESTION 5

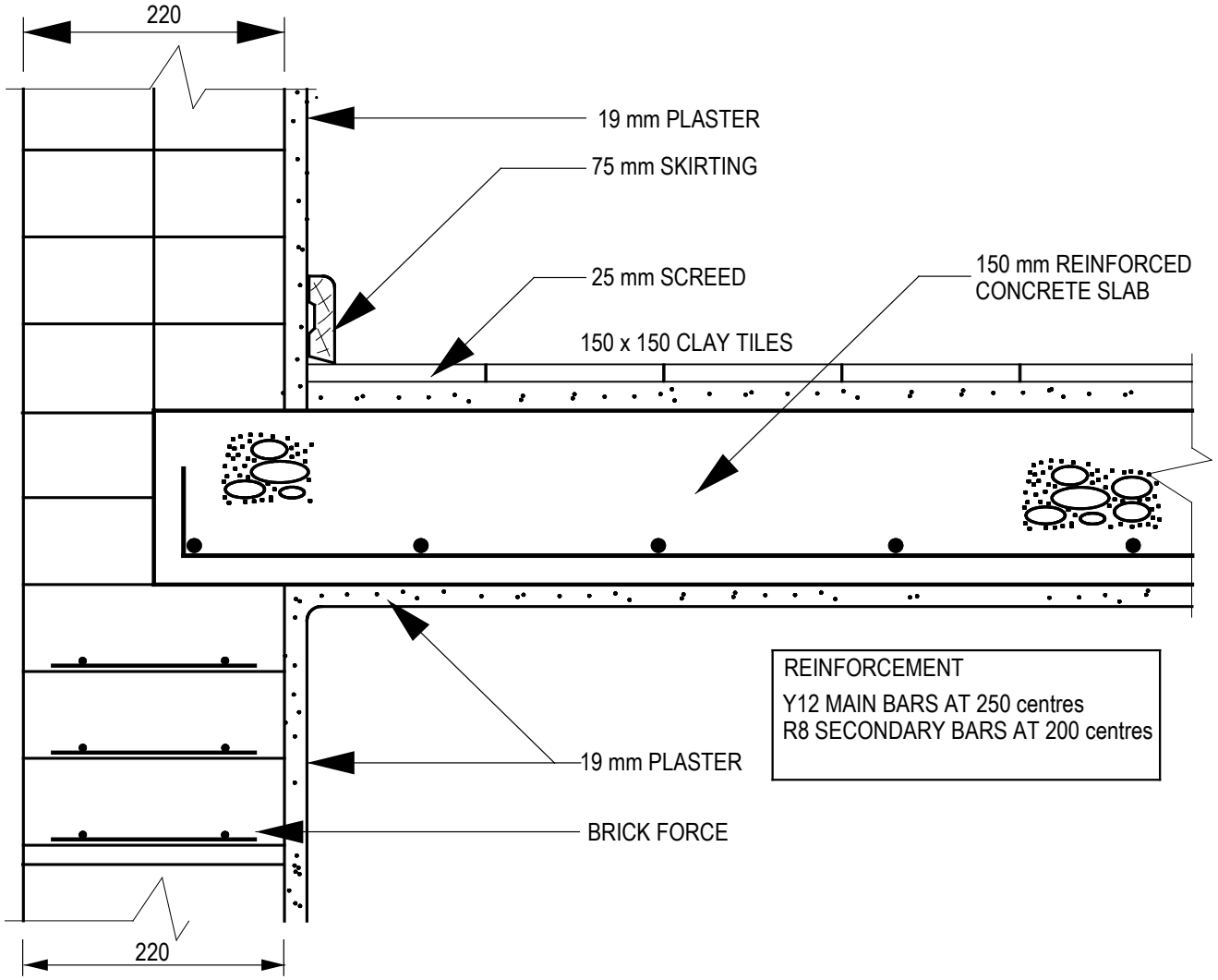

QUESTION 5		
MARK ALLOCATION		
CORRECTNESS:		10
Brick wall corr.	2	
RC Slab	2	
Reinforcement	2	
Floor finishes	2	
Plaster	2	
Accuracy		3
Labels		1
Total		14

Copyright reserved

QUESTION 6

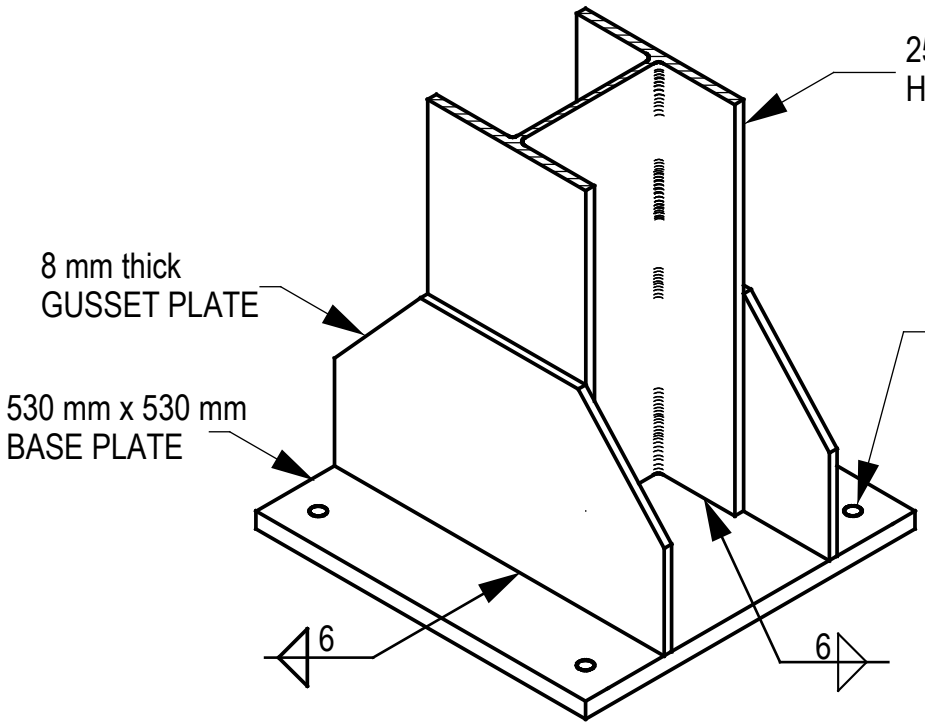

ISOMETRIC VIEW OF STEEL COLUMN

MARK ALLOCATION

QUESTION 6	
Steel column	2
Base plate	1
Flange plates	2
Welding symbols	2
Bolt holes	1
Accuracy	3
Total	11

TOTAL: 100

Copyright reserved