higher education & training

Department:
Higher Education and Training
REPUBLIC OF SOUTH AFRICA

NATIONAL CERTIFICATE

BUILDING AND STRUCTURAL CONSTRUCTION N5

(8060015)

7 December 2023 (X-paper)
09:00–13:00

CLOSED BOOK EXAMINATION

REQUIREMENTS: Answer book (8/13)
A2 drawing sheet
Hot-rolled steel sections (BOE 8/2)

Nonprogrammable calculators may be used.

This question paper consists of 6 pages, a 2-page diagram sheet and a formula sheet.

295Q1G2307

Copyright reserved

DEPARTMENT OF HIGHER EDUCATION AND TRAINING
REPUBLIC OF SOUTH AFRICA

NATIONAL CERTIFICATE
BUILDING AND STRUCTURAL CONSTRUCTION N5
TIME: 4 HOURS
MARKS: 100

INSTRUCTIONS AND INFORMATION

1. Answer all the questions.
2. Read all the questions carefully.
3. Questions 1, 3, 5 and 6 must be done in the ANSWER BOOK.
   Questions 2 and 4 must be done on the supplied A2 drawing paper.
   OPTION: You may draw the shear force and bending moment diagrams on the drawing paper.
4. Number the answers according to the numbering system used in this question paper.
5. All drawings must be drawn in pencil with bold outlines.
6. The drawings must be done in accordance to National Standards and be fully labelled with descriptive notes and dimensions (where applicable).
7. All calculations must conform to the relevant SABS/SANS Code of Practice.
8. Use only a blue or black pen.
9. Write neatly and legibly.

Copyright reserved

QUESTION 1

FIGURE 1 DIAGRAM SHEET 1 (attached) shows a dimensioned shaped figure with a rectangular hole. Calculate the following:

1.1 The position of the neutral axis from AB (4)

1.2 The second moment of area about the neutral axis (7)

1.3 The section modulus (z) about the neutral axis (3)

1.4 The bending moment maximum using a bending stress of 154 MPa (2)

[16]

QUESTION 2

FIGURE 2 DIAGRAM SHEET 1 (attached) shows two structural steel beams attached to a structural steel column. The main beam is seated and welded to the left flange of the column. The secondary beam is situated 100 mm below the top of the main beam that is seated and welded to the web of the column.

Use a scale of 1:5 and draw the following THREE views in first-angle orthographic projection:

2.1 The front view as seen in the direction of arrow 'FV'

2.2 The side view as seen in the direction of arrow 'SV'

2.3 The top view of the three steel members

Use the following specifications:

Steel column:	254 × 254 × 62,5 kg/m H-section parallel flange fillet-welded all-round the column
Main beam:	305 × 165 × 40,5 kg/m I-section parallel flange fillet-welded all-round the column
Secondary beam:	203 × 133 × 25,3 kg/m I-section parallel flange fillet-welded all-round the column
Seating cleat:	90 × 90 × 12 angle cleats fillet-welded to the column flange and web
Welding:	8-mm fillet welding

The completed orthographic views must include all the labels. Do not include welding symbols.

[21]

Copyright reserved

QUESTION 3

FIGURE 3 DIAGRAM SHEET 2 (attached) shows six Grade 4,6 M12 bolts used to form a half-lap joint between two 100 × 10 mm plates.

Calculate the following:

3.1 The resistance of the bolts to shearing (3)

3.2 The resistance of the bolts to crushing (3)

3.3 The resistance of the tie to tearing (4)

3.4 The maximum force the connection can withstand safely (2)

Specifications:

Allowable shear stress = 110 MPa
Allowable bearing or crushing stress = 230 MPa
Allowable tearing or tensile stress = 140 MPa

[12]

QUESTION 4

4.1 Use a scale of 1:10 and draw a vertical longitudinal sectional view at the bottom of a reinforced concrete staircase to show the first four steps. The staircase is anchored by means of an edge beam that forms part of the first step.

The staircase is constructed on an existing floor slab.

Use the following construction details:

Tread: 230 mm
Raking riser: 165 mm (refer to FIGURE 4)
Waist: 170 mm thick
Edge beam: 300 × 450 mm

Reinforcement:

Edge beam:
2Y16 tension reinforcement
2Y12 compression reinforcement
R8 binders

Waist:
Y12 tension reinforcement at 200 centres
R10 secondary reinforcement at 200 centres

Floor:
Y12 main and distribution steel at 200 centres both ways

Copyright reserved

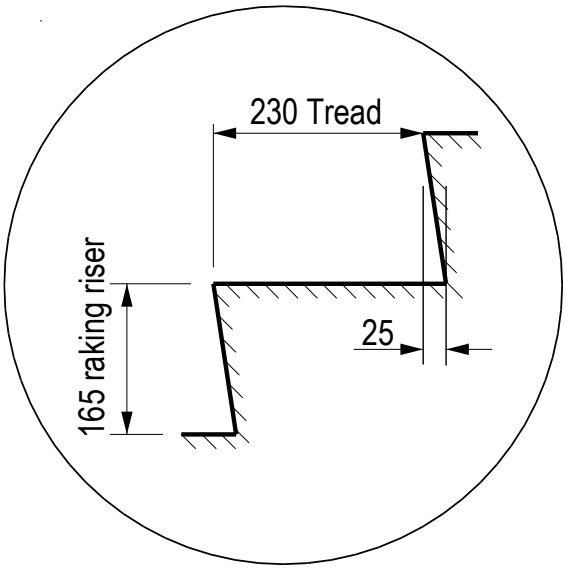

FIGURE 4
DETAIL OF THE RAKING RISER

The completed drawing must include all the construction details, labels and dimensions. (22)

4.2 Calculate the maximum shear stress in the chosen steel beam. (8)
[30]

QUESTION 5

FIGURE 5 DIAGRAM SHEET 2 (attached) shows a steel beam loaded with two point loads and two uniformly distributed loads. The beam has a 1,5-m overhang on the right-hand side.

Answer the following questions with regard to the loaded beam:

5.1 Calculate the reaction at RL and RR. (4)

5.2 Calculate and draw the shear force diagram. Insert all values on the diagram. (6)

5.3 Calculate and draw the bending moment diagram. Insert the value of the bending moment maximum on the diagram. (6)

5.4 Calculate the maximum section modulus for the loaded beam. (3)

5.5 Select from the structural steel tables a suitable I-section with parallel flanges for the loaded beam. (1)

5.6 Calculate the maximum shear stress in the chosen steel beam. (1)

Copyright reserved

Use the following scales:

Load diagram: 140 mm = 9,5 m

Shear force: 1 mm = 1 kN

Bending moment: 1 mm = 1 kN.m

The permissible bending stress for Grade 43 mild steel is 166 MPa. The maximum shear stress must not exceed 100 MPa. **[21]**

TOTAL: 100

Copyright reserved

DIAGRAM SHEET 1

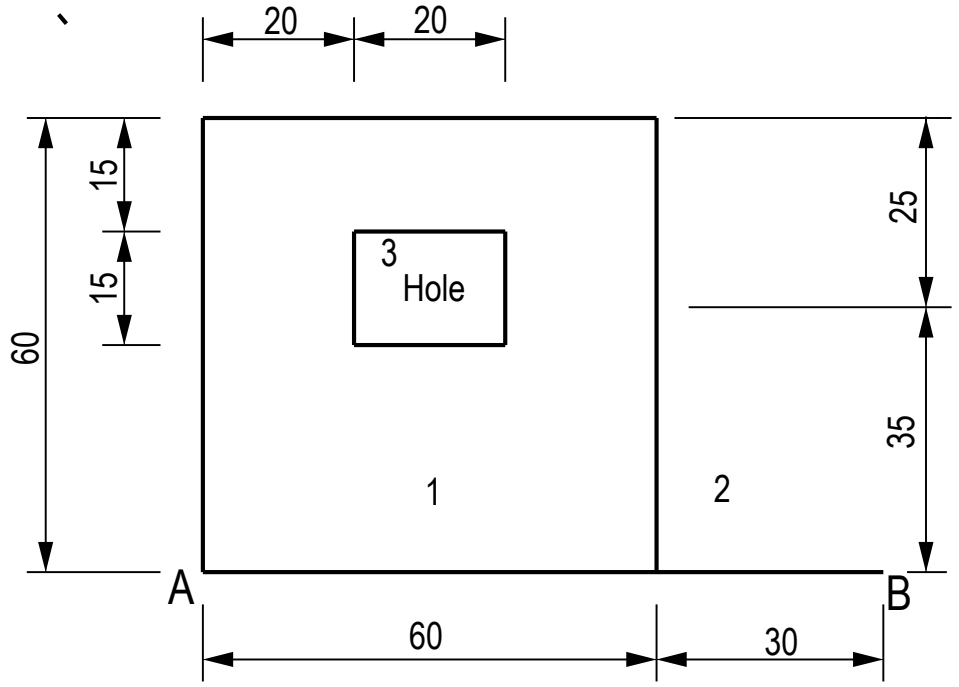

FIGURE 1

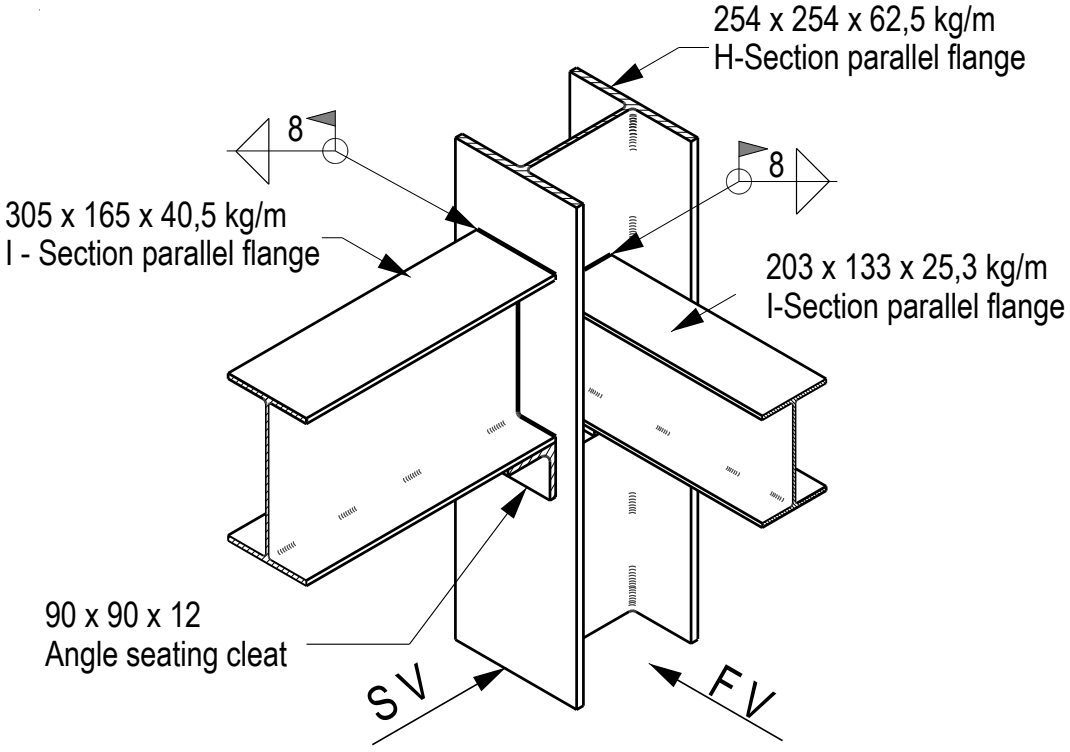

FIGURE 2

Copyright reserved

DIAGRAM SHEET 2

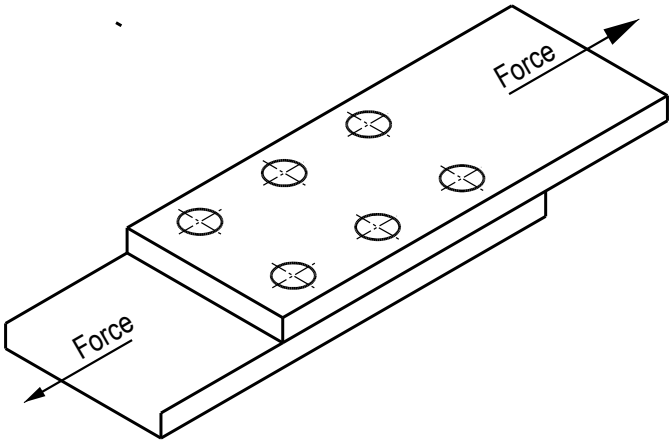

FIGURE 3

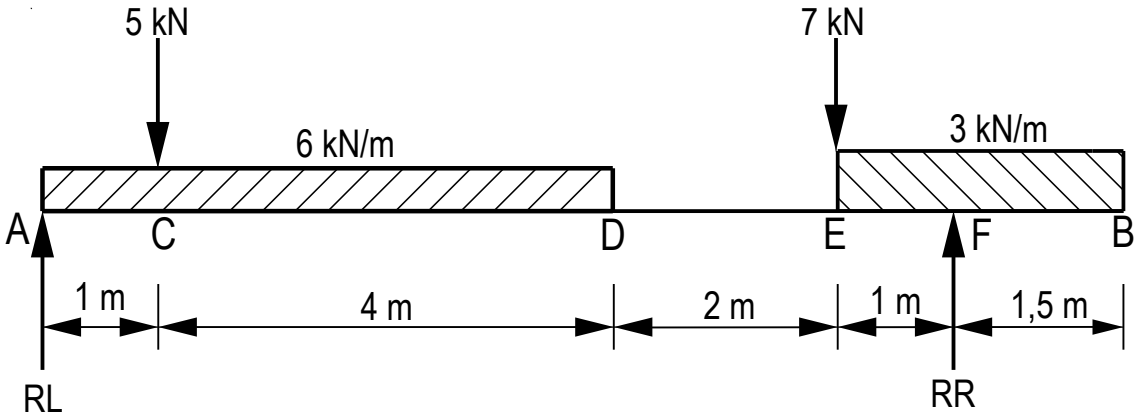

FIGURE 5

Copyright reserved

BUILDING AND STRUCTURAL CONSTRUCTION N5

FORMULA SHEET

Any other applicable formula is also accepted.

$A = \frac{1}{2} bh$

$A = \frac{\pi d^2}{4}$

$\sum CWM = \sum ACWM$

$\sum \uparrow F = \sum \downarrow F$

Moment = force x distance

BM = reaction moment – load moment

$\frac{m}{I} = \frac{f}{y}$

$Z = \frac{I}{y}$

$I_{xx} = \frac{bd^3}{12}$

$I_{xx} = \frac{bd^3}{36}$

$I_{xx} = \frac{bd^3}{12} + aI^2$

$F_s = A_s \times f_s \times n$

$F_t = A_t \times f_t \times n$

$F_c = A_c \times f_c \times n$

$A_s = \frac{\pi d^2}{4}$ $A_s = \frac{\pi(\emptyset - 0{,}9382\, p)^2}{4}$

$A_t = [(B \times T) - n (d \times t)]$

$A_c = (d \times t)$

$HC = F \times \cos \theta$

$R = \sqrt{VC^2 + HC^2}$

$VC = F \times \sin \theta$

$D = \frac{mass}{volume}$

W = mass × ga

$Stress = \frac{load}{area}$

$Z = \frac{m}{f}$

$X = \frac{\sum Ax}{\sum A}$

$I_{yy} = \frac{db^3}{12}$

$I_{xx} = \frac{\pi D^4}{64}$

$I_{xx} = \frac{BD^3}{12} - \frac{bd^3}{12}$

Copyright reserved