higher education & training

Department:
Higher Education and Training
REPUBLIC OF SOUTH AFRICA

MARKING GUIDELINE

NATIONAL CERTIFICATE

BUILDING AND STRUCTURAL CONSTRUCTION N5

7 December 2023

This marking guideline consists of 9 pages.

Copyright reserved

QUESTION 1

1.1 Calculate areas:
Area 1: 60 × 60 = 3 600
Area 2: ½ 35 × 30 = 525
Area 3: 20 × 15 = -300✓
Total area = 3 825✓ (2)

Calculate neutral axis from AB:
3 825 × y_1 = (3 600 × 30) + (525 × 11,667) − (300 x 37,5)✓
$y_1 = \frac{108\,000 + 6\,125{,}175 - 11\,250}{3\,825}$
$y_1 = \frac{11\,4125{,}175 - 11\,250}{3\,825}$
y_1 = 26,90 mm✓ (2)

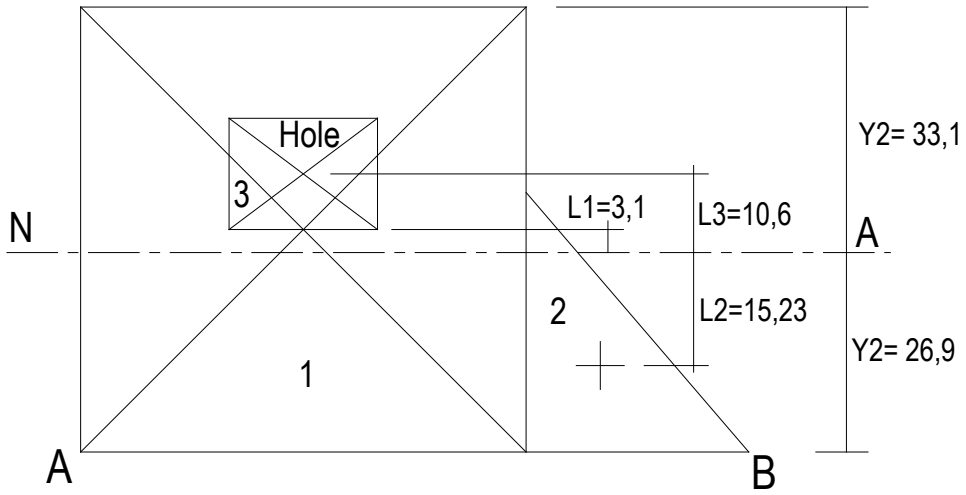

NA	60 - **26,9**(Y_1) = **33,1**(Y_2)	
L1	60/2 – 26,9	= 3,1
L2	26,9 – 35/3	= 15,23

L1	33,1 - 30	= 3,1
L2	33,1 - 25 - (35 × 2/3)	= 15,23
L3	33,1 – 15 + 15/2	= 10,6

1.2 Calculate second moment of area:
$I_{xx\ total} = \left(\frac{bd^3}{12} + AL^2\right) + \left(\frac{bd^3}{12} + AL^2\right) - \left(\frac{\pi d^4}{64} + AL^2\right)$

$I_{xx\ 1} = \left(\frac{60 \times 60^3}{12} + 60 \times 60 \times 3{,}1^2\right)$
$= (108\,0000 + 3\,4596) =$ 11 1459 mm⁴✓✓

$I_{xx\ 2} = \left(\frac{30\ x\ 35^3}{36} + ½ \times 30 \times 35 \times 15{,}233^2\right)$
$= (35\,729{,}167 + 121\,823{,}252)$ = 157 552,419 mm⁴✓✓

$I_{xx\ 3} = \left(\frac{20\ x\ 15^3}{12} + 20\ x\ 15 \times 10{,}6^2\right)$
$= (5\,625 + 33\,708) =$ -39 333 mm⁴✓✓
I_{xx} TOTAL = 123 2815,419 mm⁴✓ (7)

1.3 Calculate the profile modulus (Z): (3)

$Z = \frac{I}{Y}$

$Z = \frac{123\ 2815{,}419\ mm4}{26{,}90\ mm}$ ✓✓

Z = 45 829, 569 mm³ 45, 83 × 10^{-6} m^3✓

1.4 Bending moment (bending stress = 154 MPa):

$\frac{m}{I} = \frac{f}{Y}$

$M = \frac{123\ 2815{,}419 \times 154}{26{,}90\ mm}$ ✓

M = 705 7753,7 N.mm

M = 7,06 kN.m✓ (2)

[16]

QUESTION 2

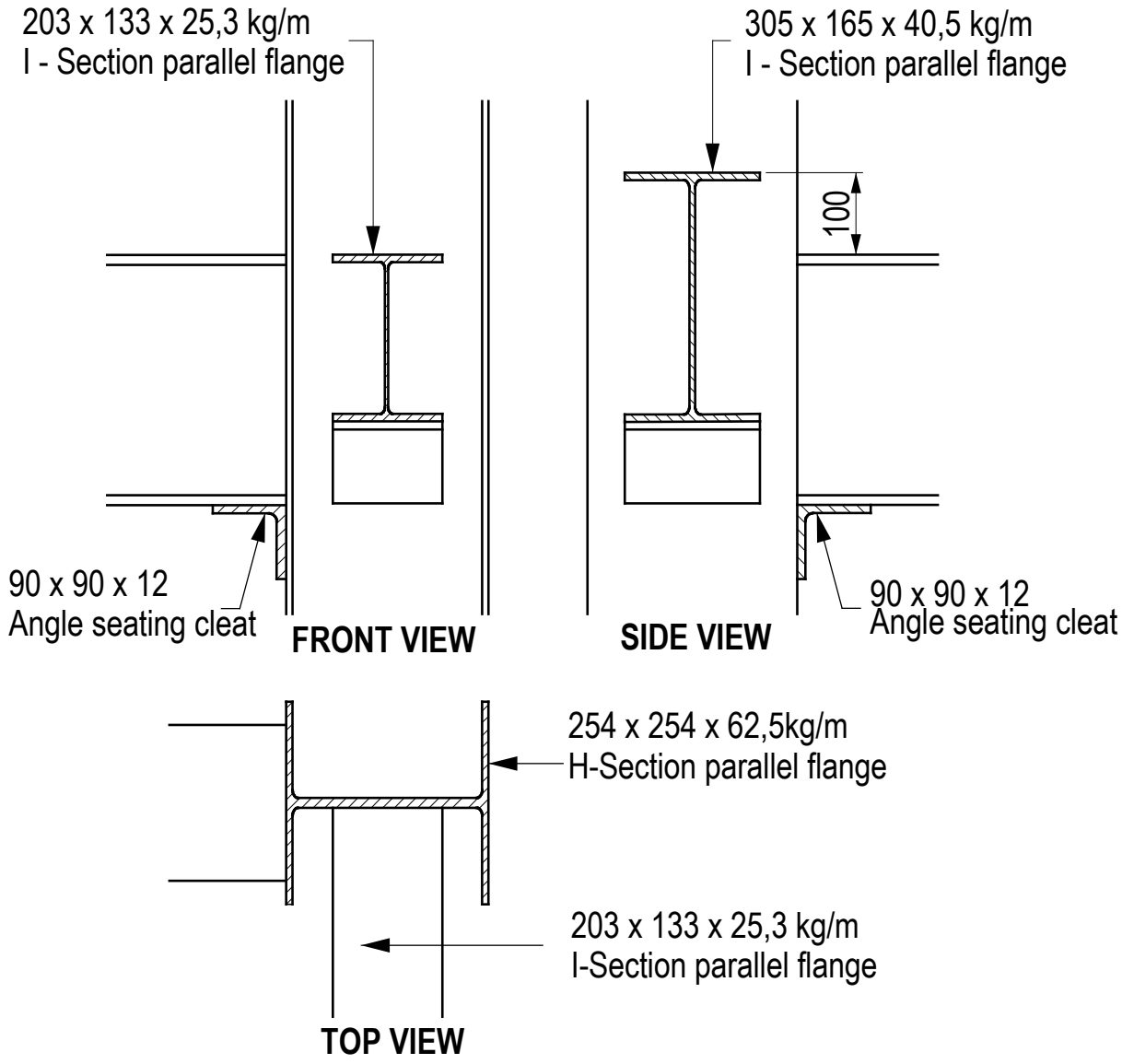

QUESTION 2		
FRONT VIEW		
CORRECTNESS:		5
Column	1	
2 Beams	2	
Seating cleats	2	
Total		5

QUESTION 2		
SIDE VIEW		
CORRECTNESS:		5
Column	1	
2 Beams	2	
Seating cleats	2	
Total		5

QUESTION 2		
TOP VIEW		
CORRECTNESS:		4
Column	2	
2 Beams	2	
Total		4

Accuracy	3
Lables & Dim	2
Hatching	2
Total	7
5 + 5 + 4 + 7 Total = 21 marks	

[21]

QUESTION 3

3.1 Resistance force of the bolts to shearing:
Shear stress = load/area
Load = area × stress
Force in shear = $\frac{\pi d^2}{4}$ × f × n (diameter = 12 mm)
= $\frac{\pi 12^2}{4}$ × 110 N/mm² × 6✓
= 74 644, 24 N
= 74, 644 kN✓✓ (Correct answer and unit) (3)

3.2 Resistance force of the bolts to crushing:
Load = area × stress
Crushing force = (d × t) × stress × n
= (12 × 10) × 230 N/mm² × 6✓
= 165 600 N
Crushing force = 165, 6 kN✓✓ (Correct answer and unit) (3)

3.3 Resistance force of the tie to tearing:
Load = area × stress
$F_s = A_t \times f_t \times n$
Force in tearing = $[(B \times T) - n(d \times t)] \times f_t$
= [(100 × 10) – 3(12 × 10)] x 140 N/mm²✓
= [(1000) – 3(120)] × 140 N/mm²
= 1000 – 360] × 140 N/mm²
= 640 × 140 N/mm²✓
= 89 600 N
Force in tearing = 89,4 kN✓✓ (Correct answer and unit) (4)

3.4 The maximum safe load is in tearing = 89,4 kN✓✓
(Correct answer and unit) (2)
[12]

QUESTION 4

4.1

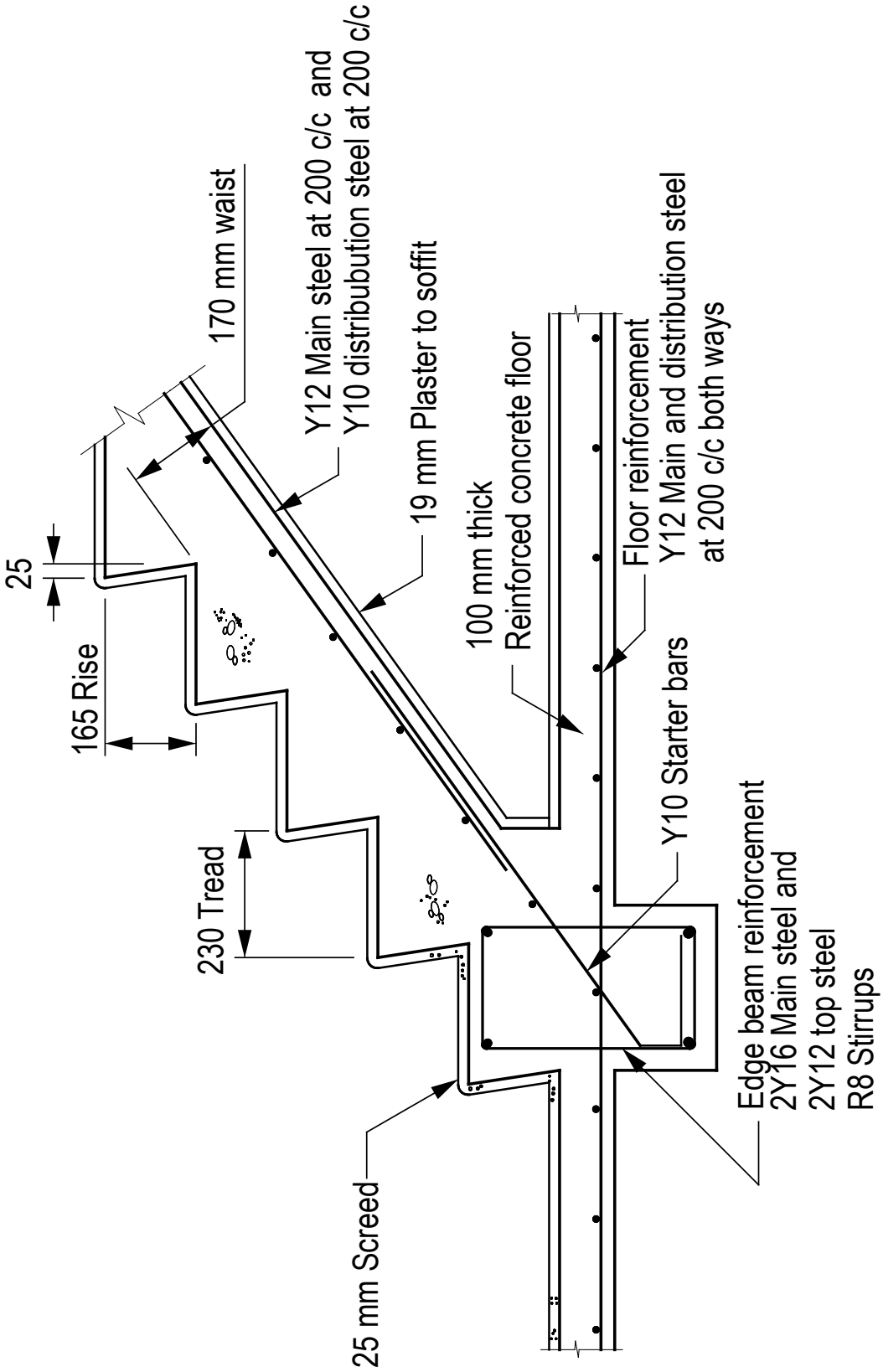

QUESTION 4 Mark Allocation	
Steps corr.	2
Waist	1
Edge beam corr.	2
Floor	1
Screed & Plaster	2
Beam Reinforcement	3
Stair Reinforcement	3
Floor Reinforcement	2
Accuracy	3
Labels	2
Dimensions	1
TOTAL	**22**

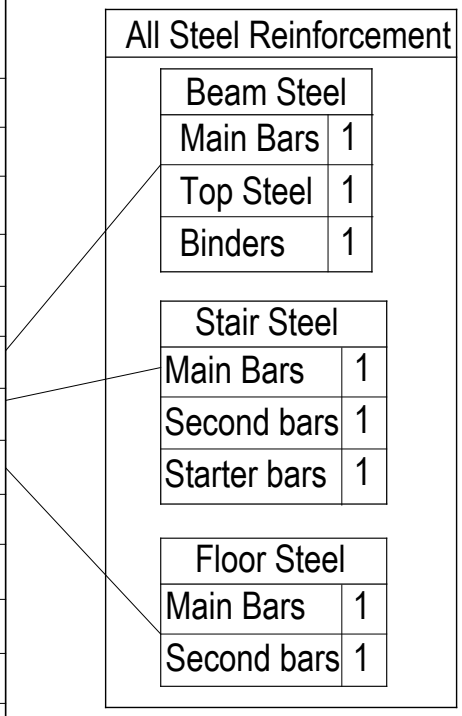

4.2 Starter bars are used to connect and anchor the downward force of the staircase.✓ Starter bars are inserted in the concrete floor✓ where the staircase will be constructed.✓ The bars will then be tied to the main bars of the staircase.✓ Where there is no solid footing for the staircase, a rectangular (edge) beam is cast✓ where the starter bars are anchored.✓ The one end of the bars are tied to the staircase main steel✓ while the other end is tied to the main bar of the edge beam steel.✓ (8)

[30]

QUESTION 5

5.1 Calculate moments about RL:

$(RR \times 8) = (3 \times 2,5 \times 8,25) + (7 \times 7) + (6 \times 5 \times 2,5) + (5 \times 1)$✓

$RR = \frac{(61,875 + 49 + 75 + 5)}{8}$

$RR = 23,86$ kN✓ (2)

Calculate moments about RR:

$(RL \times 8) + (3 \times 1,5 \times 0,75) = (6 \times 5 \times 5,5) + (5 \times 7) + (7 \times 1) + (3 \times 1 \times 0,5)$✓

$RL = \frac{(165 + 35 + 7 + 1,5) - 3,375}{8}$

$RL = 25,64$ kN✓ (2)

5.2

SF @ A: 25,64 kN	25,64 kN max
SF @ A to C: 25,64 – (6 × 1)	19,64 kN
SF @ C: 19,64 − 5	14,64 kN
SF @ C to D: 14,64 - (6 × 4)	- 9,36 kN
SF @ D: -9,36	- 9,36 kN
SF @ D to E: -9,36	- 9,36 kN
SF @ E: -9,36 − 7	- 16,36 kN
SF @ E to F: 16,36 − (3 × 1)	- 19,36 kN
SF @ F: - 19,36 +23,86	4,5 kN
SF @ F to B: 4,5 – (3 × 1,5)	0 kN
SF @ B:	0 kN

Allocate marks at random for any 2 correct answers.
Shear force max = 1 mark
Shear force diagram = 3 marks

(6)

5.3

BM C: (25,64 × 1) – (6 × 1 × 0,5) =	20,86 kNm
BM D: (25,64 × 5) – (6 × 5 × 2,5) – (5 × 4) =	24,3 kNm
BM E: (25,64 × 7) – (6 × 5 × 4,5) – (5 × 6) =	2,02 kNm
BM F: - (3 × 1,5 × 0,75) =	3,375 kNm
BM R: (25,64 × 3) – (5 x 2) – [6 × 3 × $\frac{3}{2}$]	40,82 kNm (max)

Allocate marks at random for any 2 correct answers.
Bending moment max = 1 mark
Bending moment diagram = 3 marks

(6)

5.4 Ze = $\frac{BM\ max}{stress}$ = $\frac{40{,}82\ x\ 10^6}{166}$ = 245 903,6 mm³✓

Ze = 245,9 ×10^{-6} m^3✓

Select: 203 × 133 × 29,8 kg/m I-section parallel flange✓
(Ze = 270,3 × 10^{-6}) (3)

5.6 Shear stress = $\frac{SF\ max}{D\ x\ t}$ = $\frac{25{,}64\ x\ 10^3}{206{,}8\ x\ 6{,}3}$ = 19,68 MPa✓ (1)

Ze = 19,68 MPa < 100 MPa✓ (1)

[21]

QUESTION 5

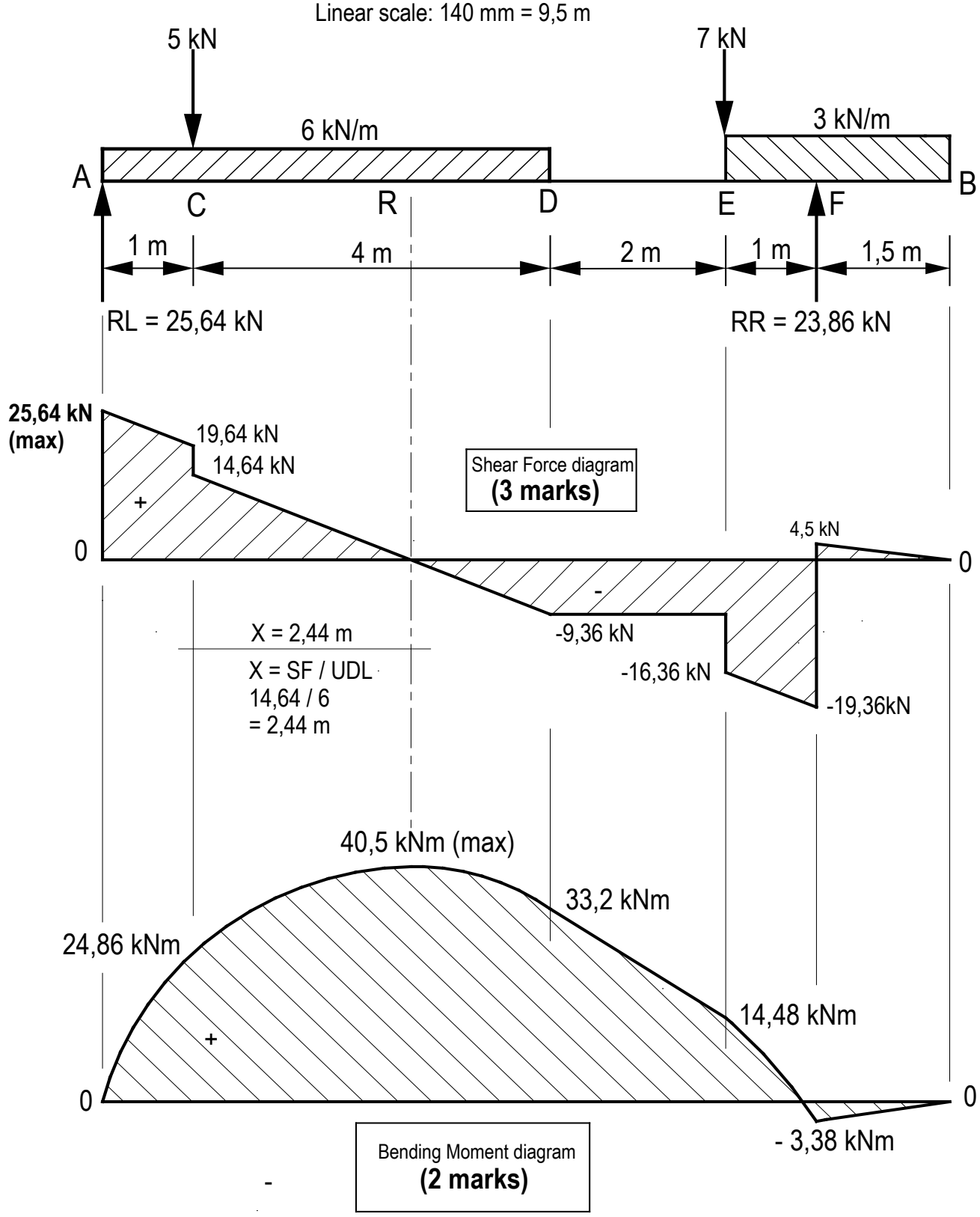

TOTAL: 100

Copyright reserved