higher education & training

Department:
Higher Education and Training
REPUBLIC OF SOUTH AFRICA

NATIONAL CERTIFICATE: MULTI-DISCIPLINARY DRAWING OFFICE PRACTICE

PICTORIAL DRAUGHTING

(8090214)

22 November 2022 (X-paper)
09:00–13:00

REQUIREMENTS: ONE sheet A4 draughting film or gateway tracing paper
ONE sheet A2 drawing paper

CLOSED-BOOK EXAMINATION

Drawing instruments and nonprogrammable calculators may be used.

This question paper consists of 5 pages, 5 diagram sheets and a 1-page formula sheet.

152Q1E2222

Copyright reserved

DEPARTMENT OF HIGHER EDUCATION AND TRAINING
REPUBLIC OF SOUTH AFRICA

NATIONAL CERTIFICATE: MULTI-DISCIPLINARY DRAWING OFFICE PRACTICE
PICTORIAL DRAUGHTING N4
TIME: 4 HOURS
MARKS: 100

INSTRUCTIONS AND INFORMATION

1. Answer all the questions.
2. Read all the questions carefully.
3. Number the answers according to the numbering system used in this question paper.
4. Use both sides of the drawing paper and answer QUESTION 1, 2 and 3 on the front of the A2 drawing sheet, QUESTION 4 and 5 on the REVERSE of the A2 drawing sheet and QUESTION 6 on the draughting film supplied.
5. A balanced layout is very important, and candidates will be penalised for poor planning.
6. A 15-mm border must be drawn around the drawing sheet (on both sides).
7. All drawing work, including candidate information, must be completed in PENCIL on the A2 drawing paper and in DRAUGHTING PEN on the A4 draughting film.
8. All drawing work must comply with the SANS 0111-1990 Code of Practice.
9. On completion, fold the A2 sheet to A3 size with the examination number visible on the front. The draughting film must be placed inside the folded A2 sheet. NO staples are to be used.
10. Use your own discretion for dimensions not given.
11. Use a 3-mm fillet radius for all radii not given.
12. Work neatly.

Copyright reserved

QUESTION 1: FREEHAND DRAWING

FIGURE 1, DIAGRAM SHEET 1 (attached), shows an isometric view of a guide block.

Use only a pencil and eraser (NO rulers) and make a freehand drawing, to scale 1:1, of a front view as seen in the direction of arrow F, a left view as seen in the direction of arrow L and a top view as seen in the direction of arrow T of the guide block. The drawing should be in first-angle orthographic projection. (11)

Do NOT show any hidden details.

Add only ONE dimension to each view and show the projection system symbol for first-angle orthographic projection. Add a title and scale below the left view and to the right of the top view.

SCALE 1:1 (3)

[14]

QUESTION 2: TWO-POINT PERSPECTIVE DRAWING

FIGURE 2, DIAGRAM SHEET 2 (attached), shows three views of a geometrical block in first-angle orthographic projection. Make a two-point perspective drawing of the guide block using the measure-point method. Point A is situated on the ground line (GL) in line with the centre of vision (CV) and up against the picture plane (PP). Line AB vanishes to the left at 45°. The distance of the eye in front of the picture plane (PP) is 130 mm and the height of the eye above the ground line (GL) is 100 mm. (16)

Show ALL the necessary points on the construction, for example CV, VPs, etc.

SCALE 1:1 (4)

[20]

QUESTION 3: ISOMETRIC PROJECTION

FIGURE 3, DIAGRAM SHEET 3 (attached), shows three views of a geometrical support block in third-angle orthographic projection.

Do NOT copy the given views but construct a suitable isometric scale. (2)

Draw an isometric projection of the geometrical support block. (18)

Do NOT show any hidden detail. Do NOT insert any dimensions.

SCALE 1:1

[20]

Copyright reserved

QUESTION 4: SQUARE-THREAD CONSTRUCTION (INTERNAL THREAD)

A square-threaded nut on a machine has been damaged beyond repair.

As a draughtsperson, you have been requested to draw a sectional view of the nut so that a new nut can be manufactured for the machine.

The nut has an outside diameter of 65 mm, and the thickness/height of the nut is 45 mm.

An internal square thread is to be machined into the new nut.

Draw, according to scale 2:1, a full sectional front view of this nut to show TWO full right-handed turns of the square thread. The pitch of the thread is 18 mm with the larger internal diameter of 50 mm.

The drawing must be in a vertical position. Show all construction lines on the drawing.

Do NOT show any hidden detail or calculations.

SCALE 2:1

[14]

QUESTION 5: GEAR-TEETH CONSTRUCTION

FIGURE 4, DIAGRAM SHEET 4 (attached), shows a pictorial view of a typical rack-and-pinion gear system as used in common drilling machines and milling machine tables.

Do NOT copy the given pictorial drawing, but draw to scale 1:1 an outside left view of the pinion as seen in the direction of arrow A. Your drawing has to show TWO complete teeth of the pinion constructed according to an approximate method. The remainder of the pinion is to be drawn according to the conventional representation.

(10)

ALL specifications as per the attached diagram sheet must be used.

Show ALL construction lines, calculations, and keyway parts on the drawing paper.

SCALE 1:1

(4)
[14]

QUESTION 6: INK DRAWING

FIGURE 5, DIAGRAM SHEET 5 (attached), shows a drawing of a plastic clothes hanger.

Draw, with ink pens and according to scale 1:1, the given view of the clothes hanger.
Use your own discretion for dimensions not given. (15)

Insert only THREE dimensions on the completed drawing: ONE radial or diametrical dimension, ONE angular dimension and ONE linear dimension. Add a suitable title and scale below the completed drawing.

SCALE 1:1 (3)

[18]

TOTAL: 100

Copyright reserved

DIAGRAM SHEET 1

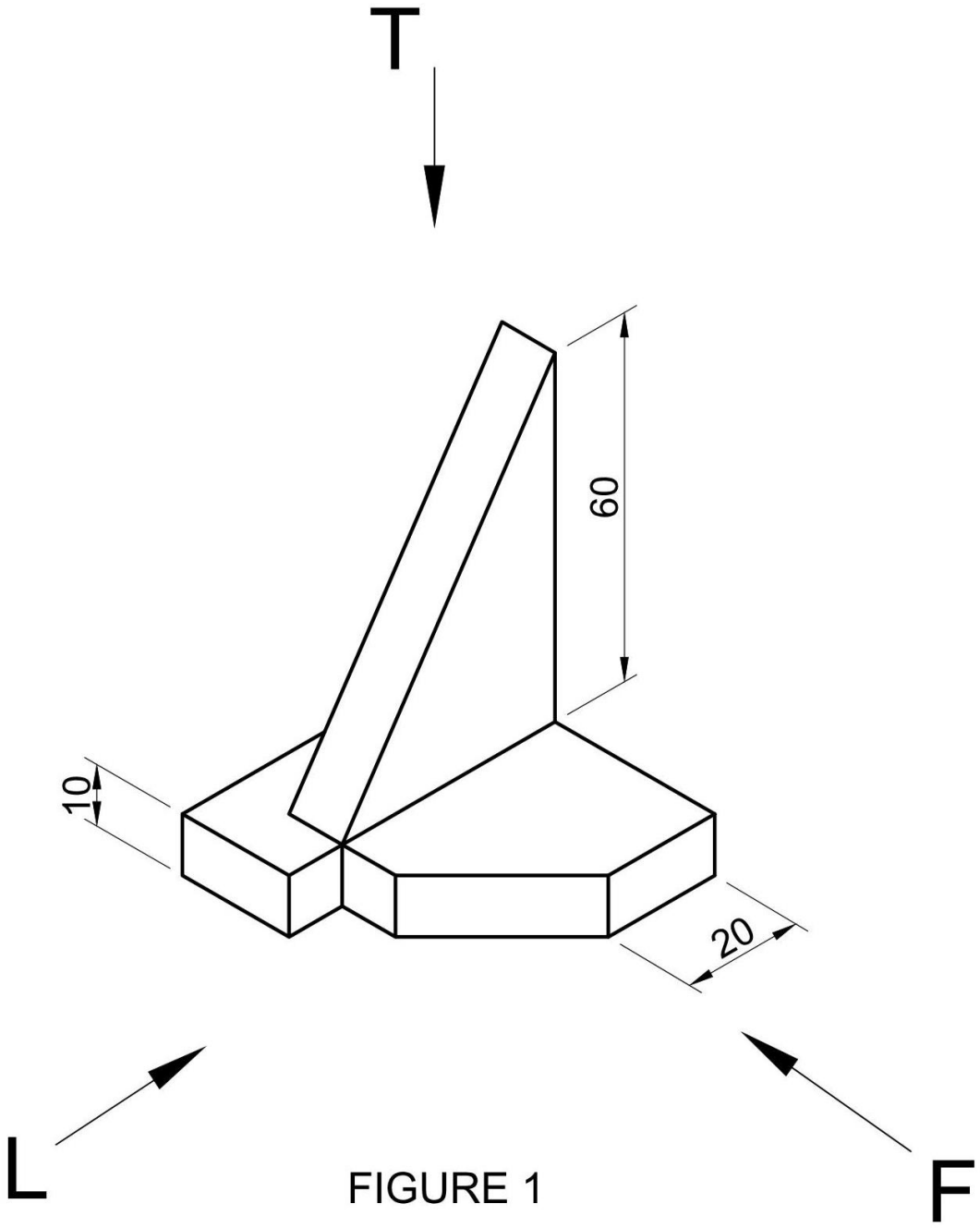

FIGURE 1

Copyright reserved

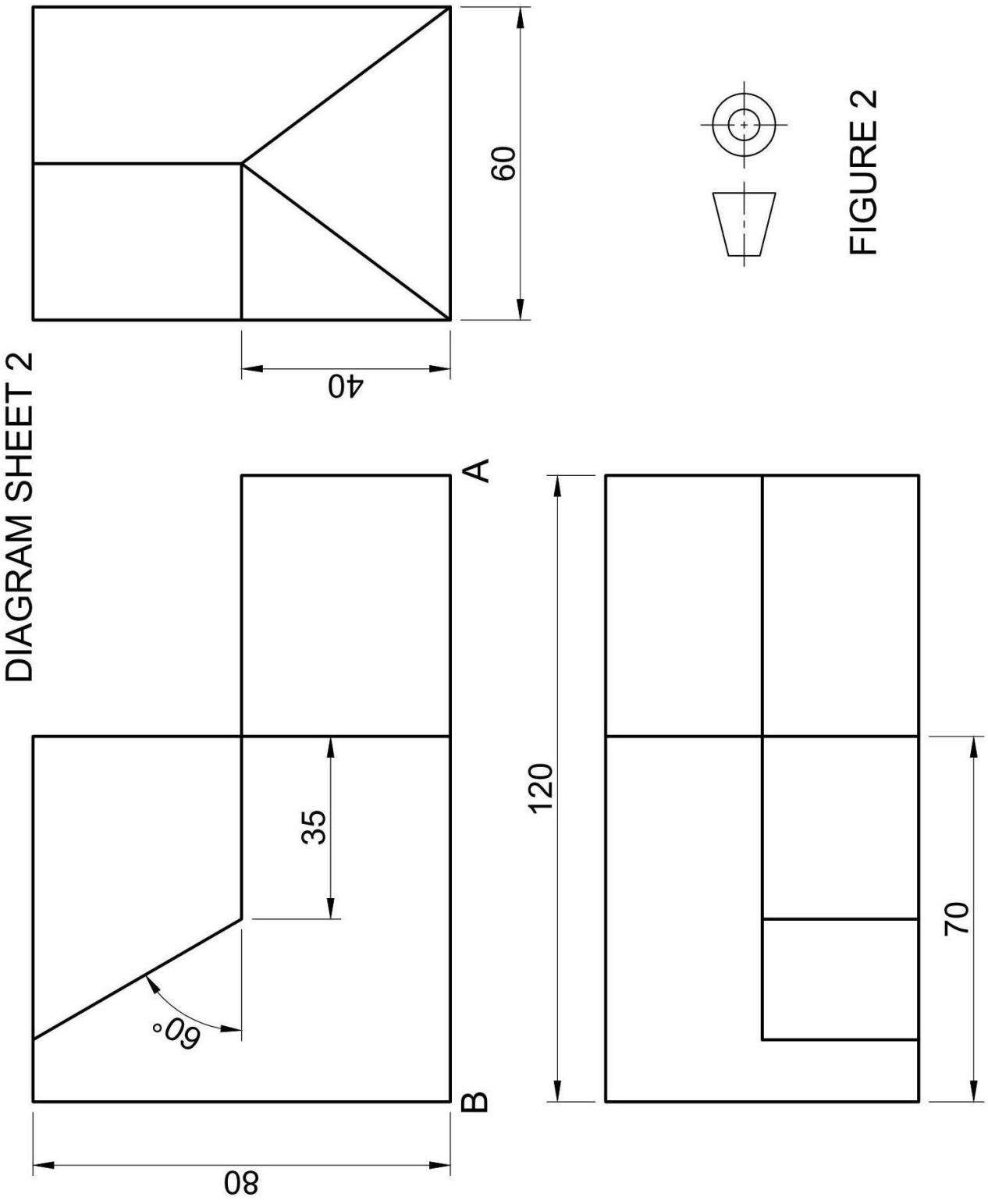

FIGURE 2

Copyright reserved

FIGURE 3

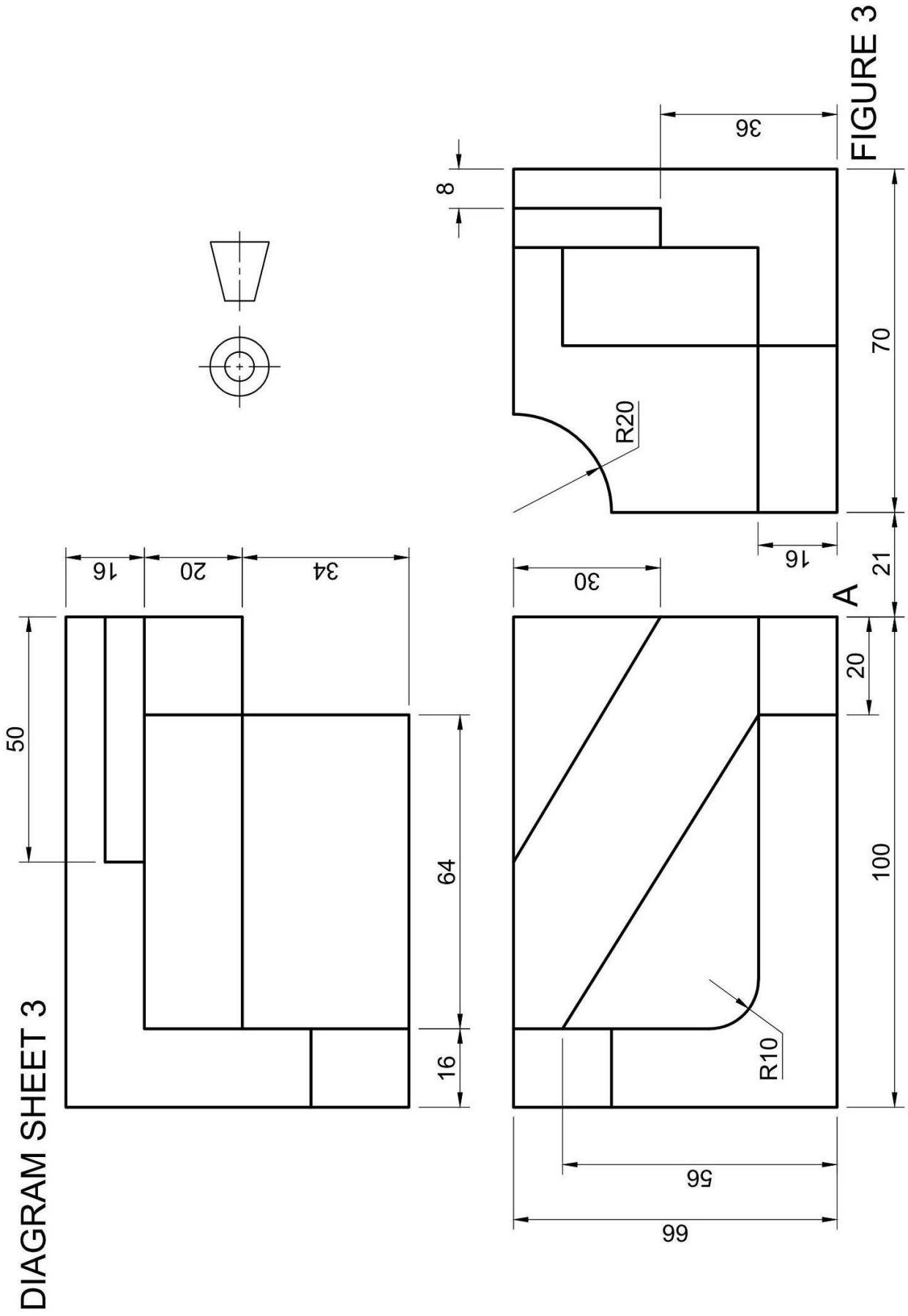

DIAGRAM SHEET 3

Copyright reserved

DIAGRAM SHEET 4

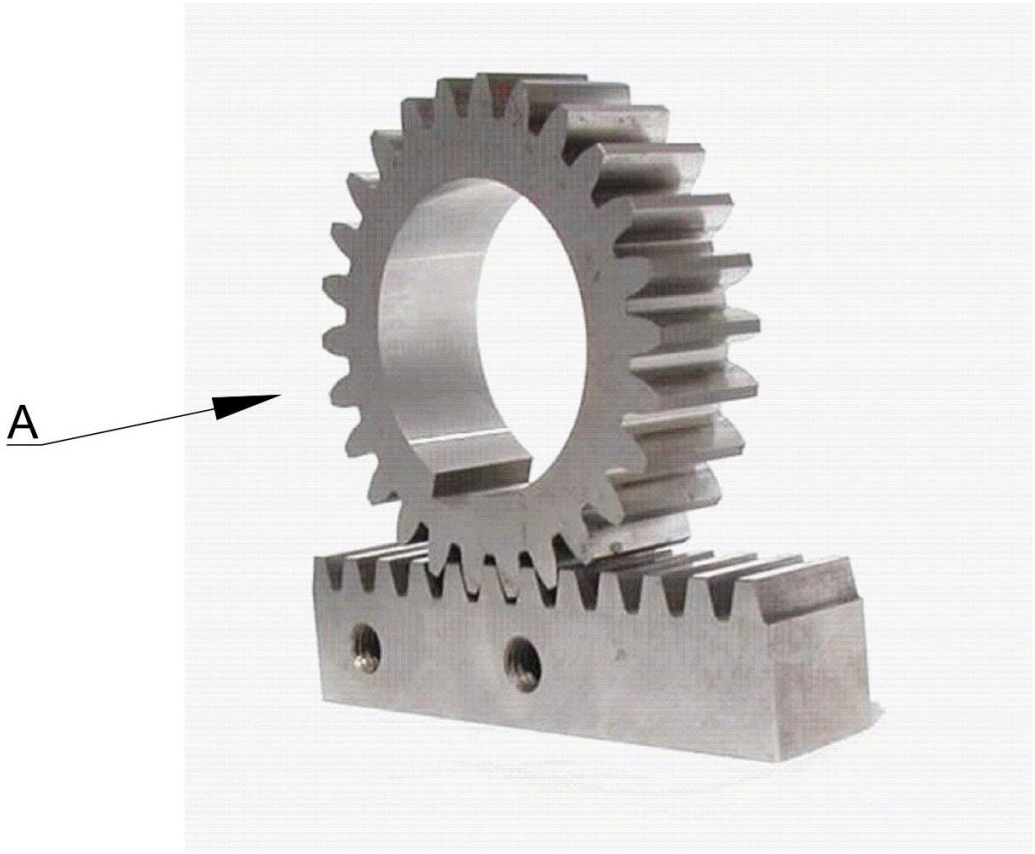

RACK & PINION
PINION = 26 TEETH
PCD = 130 mm
KEY DETAIL:
WIDTH = 10 mm
DEPTH = 4 mm
INNER DIA = 90 mm

FIGURE 4

Copyright reserved

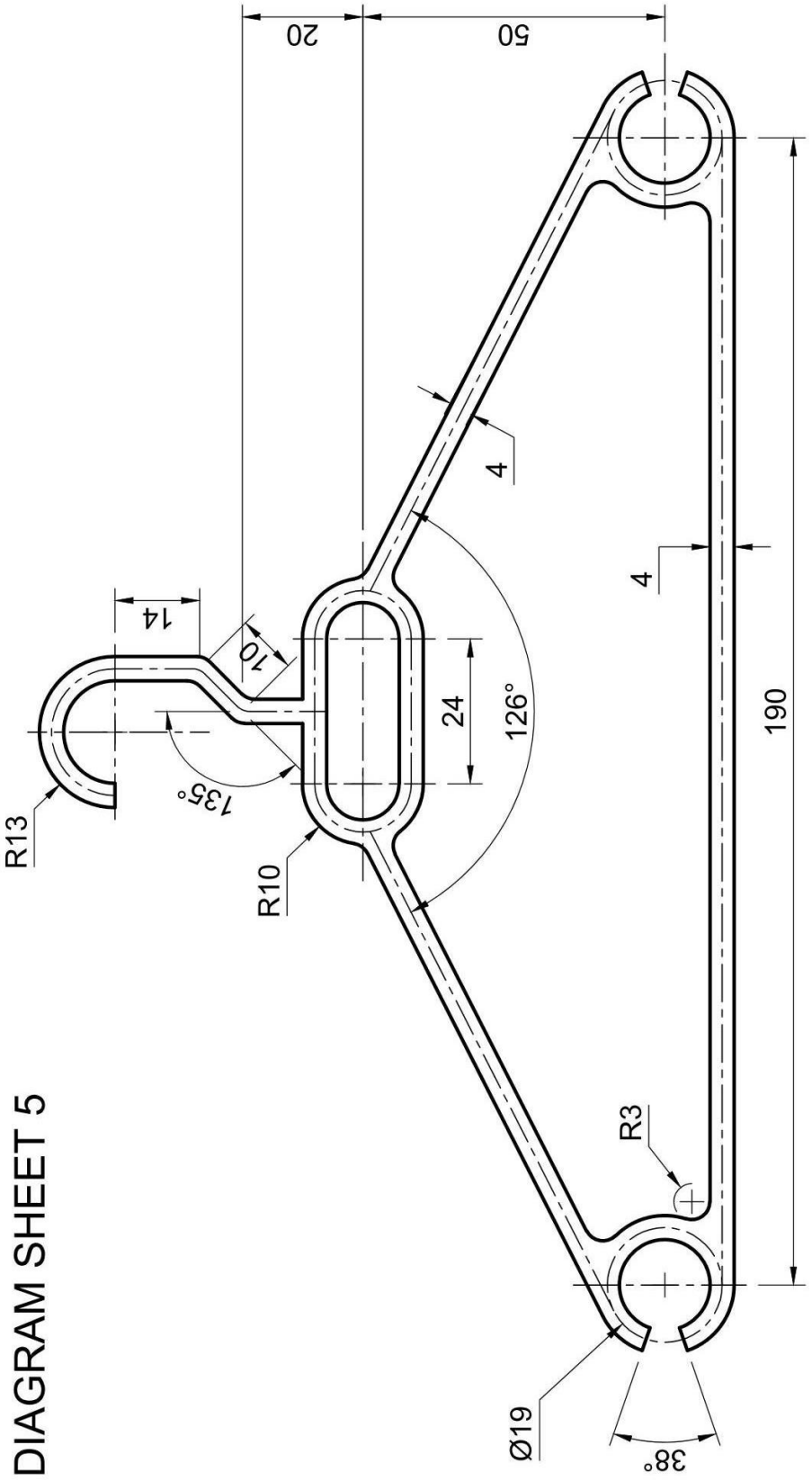

DIAGRAM SHEET 5

FIGURE 5

Copyright reserved

PICTORIAL DRAUGHTING

FORMULA SHEET

1. SCREW-THREAD CONSTRUCTION

   Length = (pitch × number of turns) + pitch/2

   Pitch divisions = pitch/12

2. GEAR-TEETH CONSTRUCTION

   Module = addendum

   Dedendum = 1,25 × module

   PCD = module × number of teeth

   Fillet radius = 0,3 × module

   Circular pitch = 3,142 × module

3. SQUARE-SPRING CONSTRUCTION

   Length = (lead × number of turns) + material thickness

Copyright reserved