higher education & training

Department:
Higher Education and Training
REPUBLIC OF SOUTH AFRICA

# MARKING GUIDELINE

## NATIONAL CERTIFICATE

## PICTORIAL DRAUGHTING

**22 November 2022**

**This marking guideline consists of 7 pages.**

Copyright reserved

**QUESTION 1**

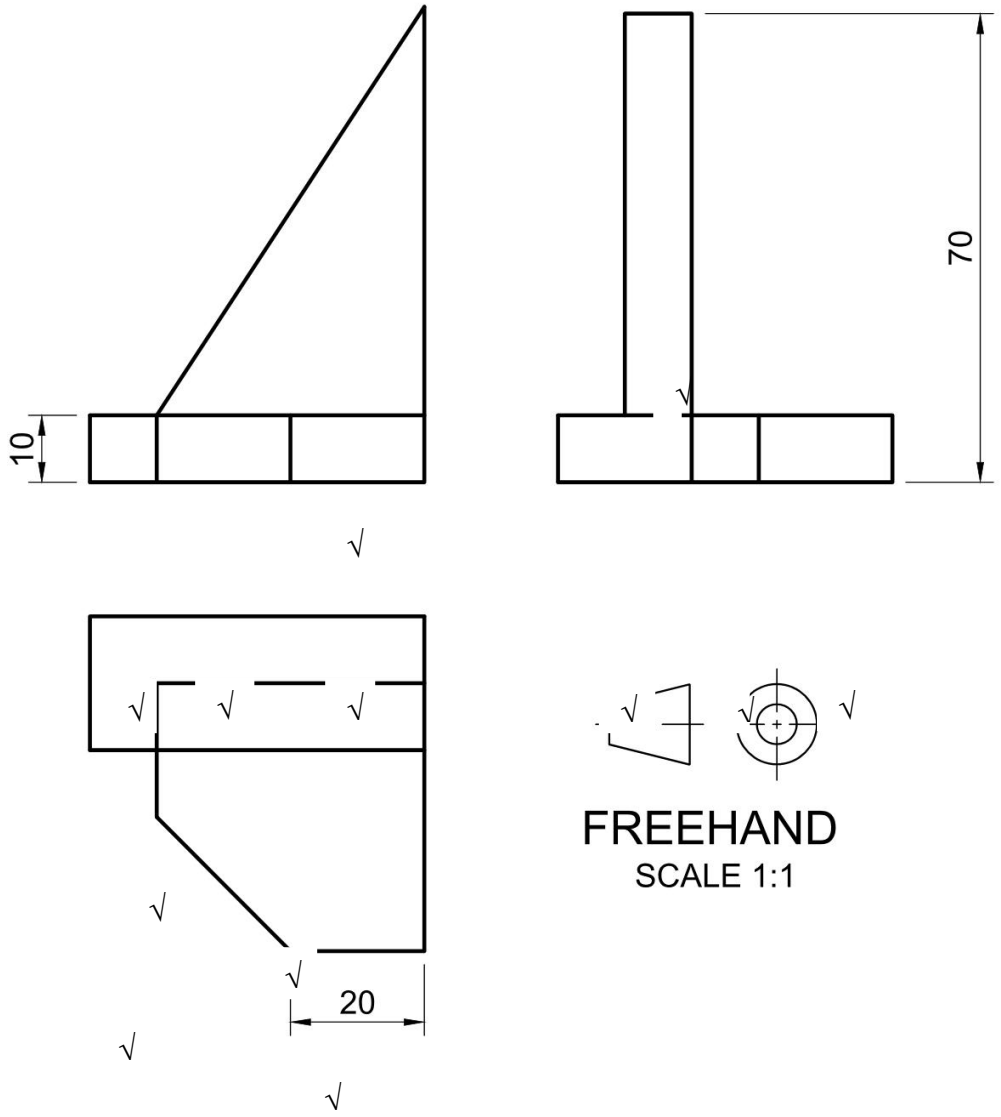


| | |
|---|---|
| PROPORTION | = 6% |
| LINEWORK | = 3% |
| ACCURACY | = 2% |
| BALANCE LAYOUT/NEATNESS | = 1% |
| DIMS & TITLE & SCALE | = 2% |
| TOTAL | = 14% |

**QUESTION 2**

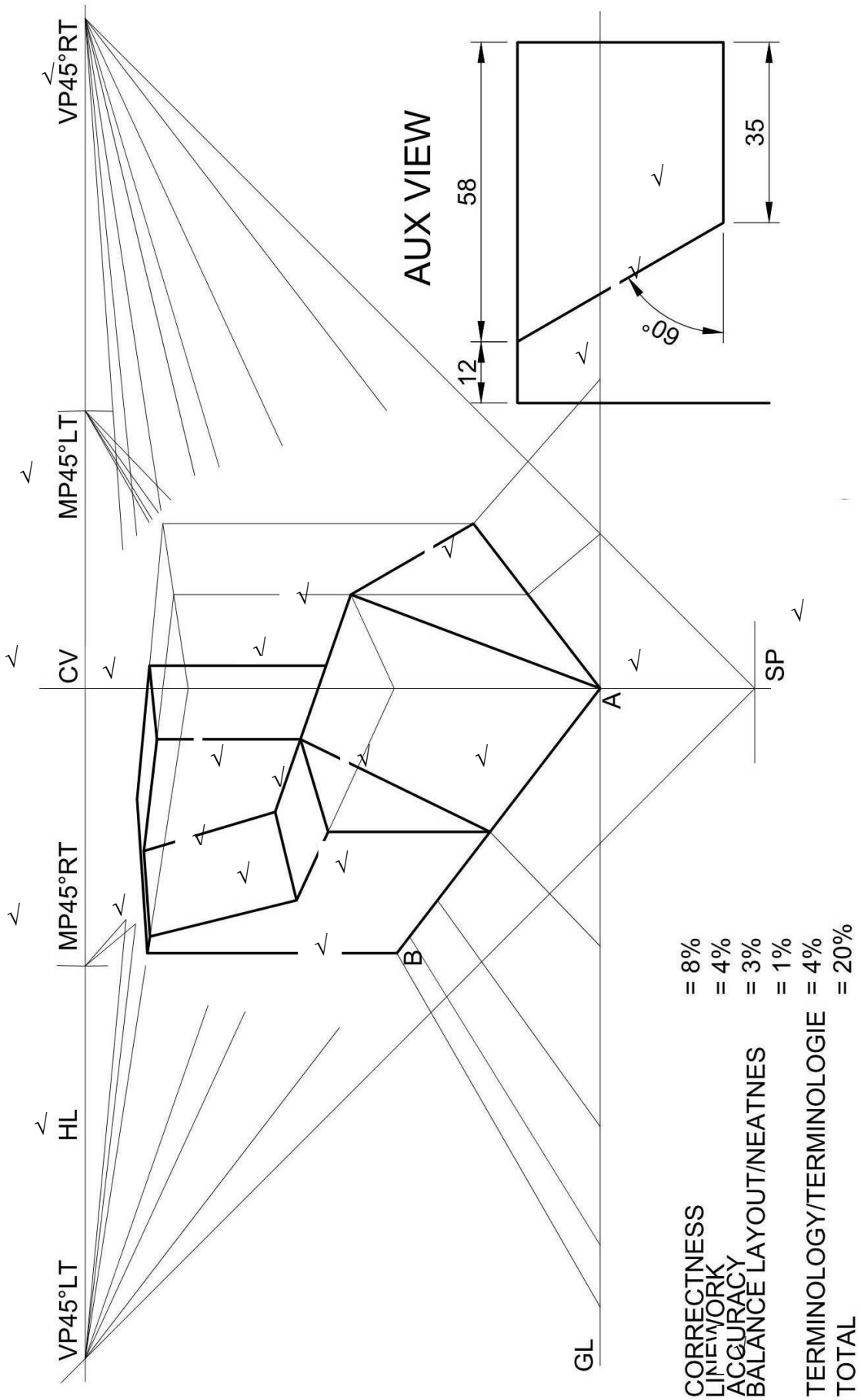
VP45°RT
MP45°LT
CV
MP45°RT
HL
VP45°LT
SP
A
B
GL
AUX VIEW
58
12
35
60°
CORRECTNESS = 8%
LINEWORK = 4%
ACCURACY = 3%
BALANCE LAYOUT/NEATNES = 1%
TERMINOLOGY/TERMINOLOGIE = 4%
TOTAL = 20%

**QUESTION 3**

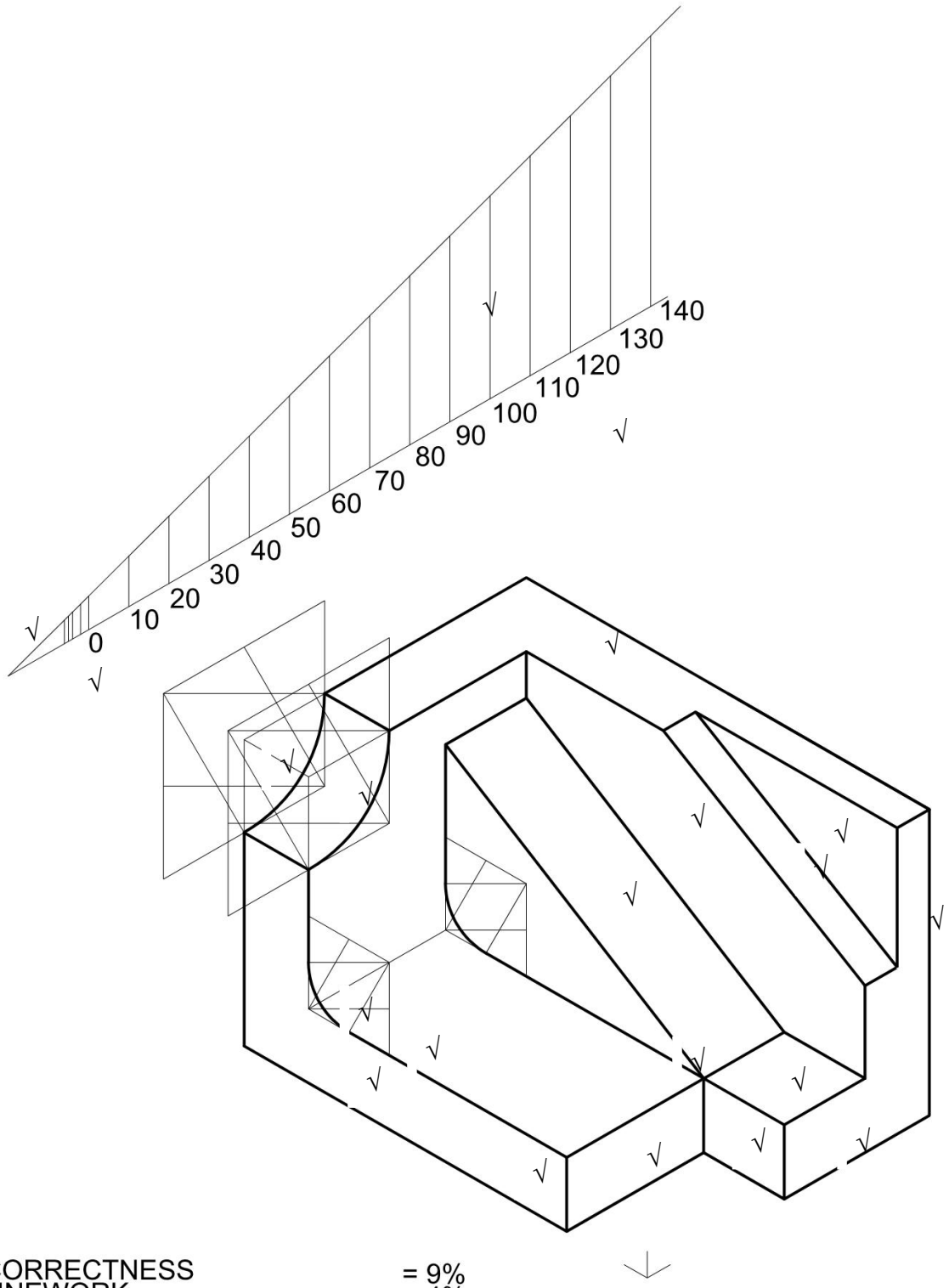


| | |
|---|---|
| CORRECTNESS | = 9% |
| LINEWORK | = 4% |
| ACCURACY | = 3% |
| BALANCE LAYOUT/NEATNESS | = 2% |
| ISOMETRIC SCALE | = 2% |
| TOTAL | = 20% |

Copyright reserved 

## QUESTION 4

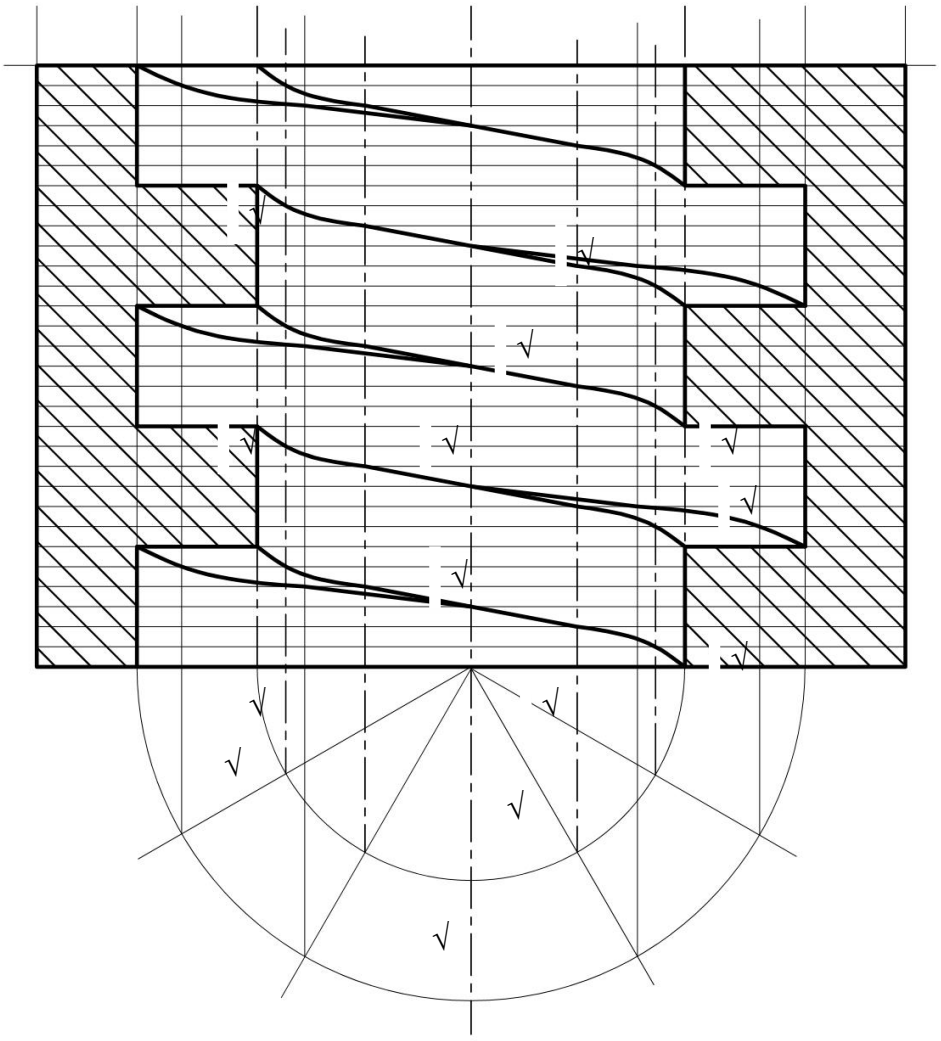

| | |
|---|---|
| CORRECTNESS | = 7% |
| LINEWORK | = 4% |
| ACCURACY | = 2% |
| BALANCE LAYOUT/NEATNESS | = 1% |
| TOTAL | = 14% |

**QUESTION 5**

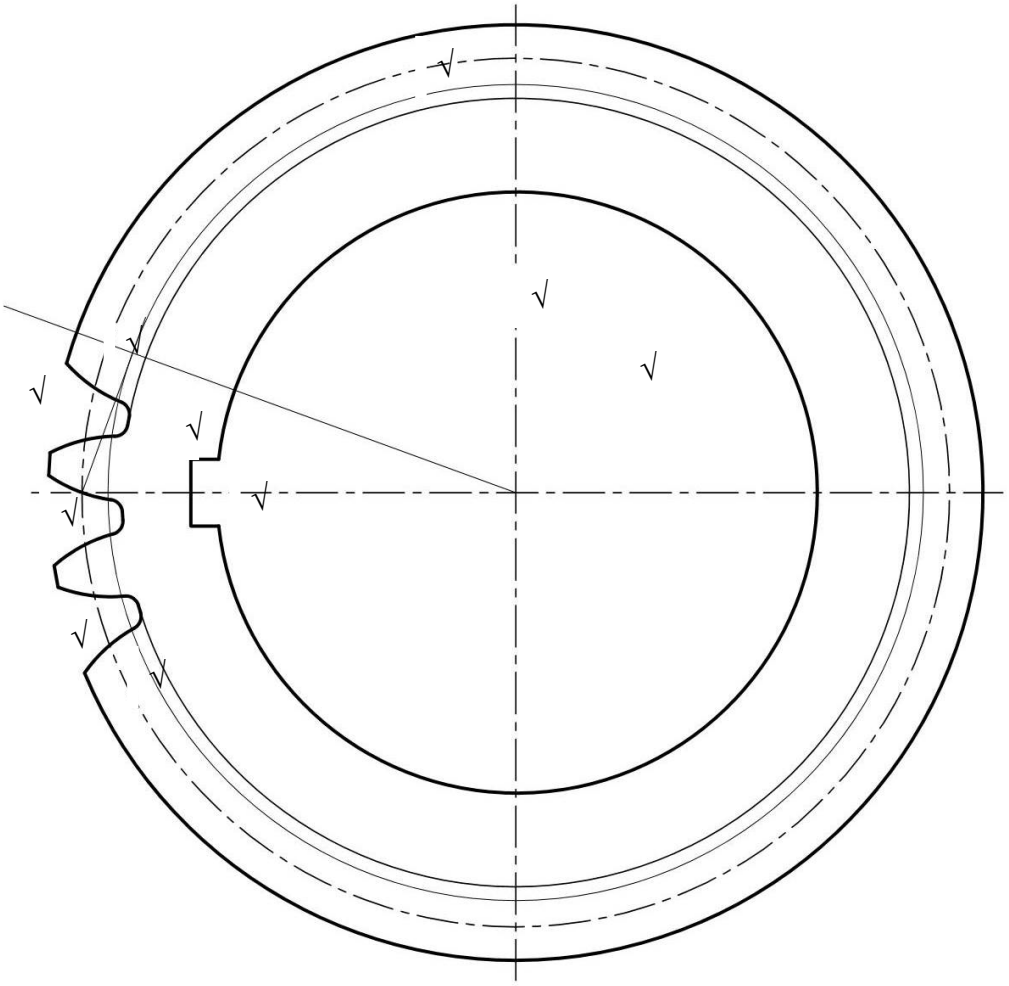

MOD = PCD/NO OF TEETH √
= 130/26 √
= 5 √

ADD = MODULE √
= 5 √

C.P. = 3,142 X M √
= 3,142 X 5
= 15,71 √

TT = 15,71/2 √
= 7.855

CORRECTNESS = 5%
LINEWORK = 2,5%
ACCURACY = 1,5%
BALANCE LAYOUT/NEATNESS = 1%

CALCS & CONSTR & KEYWAY = 4%
TOTAL = 14%

**QUESTION 6**

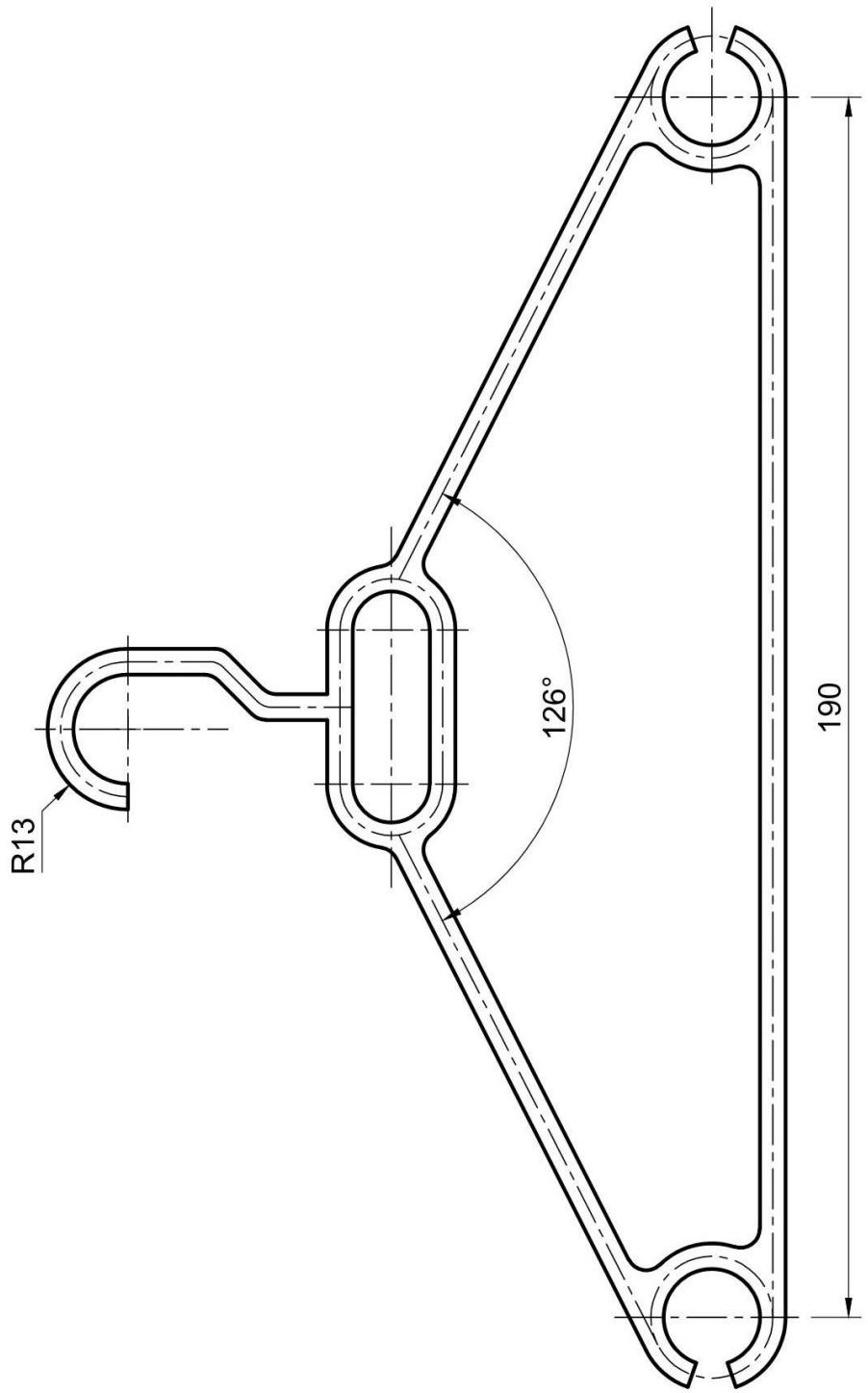


CLOTHES HANGER
SCALE 1:1

| | |
|---|---|
| CORRECTNESS | = 9% |
| LINEWORK | = 3% |
| ACCURACY | = 2% |
| BALANCED LAYOUT & NEATNESS | = 1% |
| DIMS & TITLE & SCALE | = 3% |
| TOTAL | = 18% |

Copyright reserved