higher education & training

Department:
Higher Education and Training
REPUBLIC OF SOUTH AFRICA

MARKING GUIDELINE

NATIONAL CERTIFICATE

PAPERMAKING N4

28 November 2022

This marking guideline consists of 5 pages.

Copyright reserved

SECTION A

QUESTION 1

1.1 True
1.2 True
1.3 True
1.4 True
1.5 False

(5 × 1) **[5]**

QUESTION 2

2.1 Paper created from chemical pulp and free of wood particles

2.2 Refers to how quickly water drains from pulp

2.3 The mass fraction of fibre in a suspension, expressed as a percentage

2.4 The breaking down of fibre bundles and flakes

2.5 The chemical substance that binds paper fibres together

2.6 The thickness of a paper sheet

2.7 Ability of paper to obstruct the passage of light

2.8 The process of removing water from the paper using hot cylinders

2.9 All foreign materials removed through cleaning and screening as it lowers the quality of pulp

2.10 Enhances bulk and stretch of tissue by curling and wrinkling of the tissue after the Yankee dryer

(10 × 2) **[20]**

TOTAL SECTION A: 25

SECTION B

QUESTION 3

3.1
- Paper made from chemical pulp; no mechanical pulp used
- Bleached SF chemical pulp; bleached recycled pulp; clay/$CaCo_3$
- Paper requires good tension, brightness, opacity (Any 2 × 1) (2)

3.2
- Foils, basket design – holes, slots
- Consistency, pressure drop, reject rate, temperature (5)

3.3 Couch pit; dilution water; chute; shower water; two-pump system; broke chest; save all (5)

[12]

QUESTION 4

4.1 Constant head-stuffbox, pressure-screen location, smooth gaskets, pipe angle, polished surface (4)

4.2 4.2.1 Determines jet speed; constant level prevents basis mass variations (2)

4.2.2 Discussion on either controlling total head by stock flow and level control by air flow, or total head by air flow and level control by stock flow. Stock flow slower than air-flow corrections, instrument precision and reliability absolutely important. (4)

4.3 Slice must be carefully adjusted to at least three screws at any one correction position, screws correctly maintained, replace distorted lip, balance flow in inlet manifold, rectifier rolls seated correctly, h/box showers operate correctly, set deckle edges for minimum cross waves, automated slice screw control (5)

[15]

QUESTION 5

5.1
- The zeta potential is a measure for the extent to which charged particles may interact with each other.
- PD between Stern and Gouy Chapman.
- It controls chemical dosage. (3)

5.2
- Contact time and shear rate are important.
- Avoid excessive mixing after floc formation to prevent disruption.
- Avoid high shear regions.
- Feed just prior to headbox. (4)

[7]

Copyright reserved

QUESTION 6

6.1
- PC action: Nip load determines water removal – low basis mass
- FC action: Flow of water out of sheet is limiting factor – high basis mass (4)

6.2 6.2.1 Increases
6.2.2 Increases
6.2.3 Decreases
(3 × 1) (3)

6.3

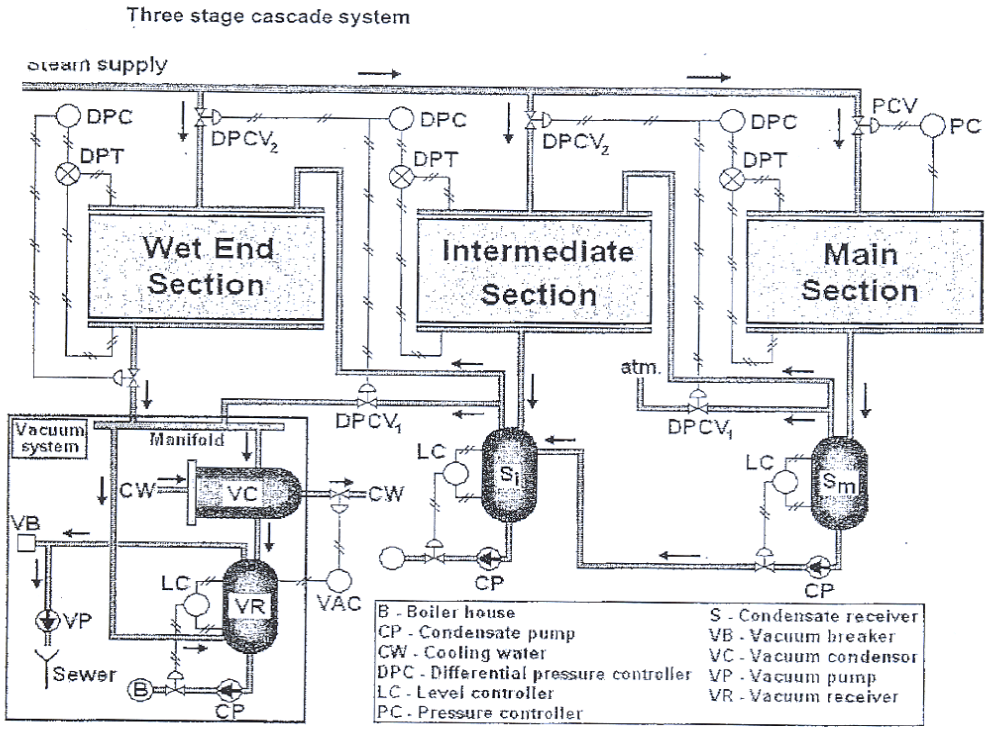

(Allocate FOUR marks for the diagram and FOUR marks for explanation)
Main steam supply, main, intermediate, wet end, separators, header, DPC, vacuum system (8)
[15]

QUESTION 7

7.1
- Porosity
- Speed
- Ingoing moisture
- Starch solids
- Load (Any 4 × 1) (4)

7.2 7.2.1 High at start, zero-load diameter
7.2.2 Drum-torque differential
7.2.3 High tension increases density
(3 × 2) (6)
[10]

QUESTION 8

8.1 Burst
8.2 Edgewise compression
8.3 Fibre bonds
8.4 Resistance to abrasion
8.5 Water resistance

(5 × 1) **[5]**

QUESTION 9

Felt cleaning and conditioning systems use mechanical and chemical means to keep press felts clean and open during press operation. Showers and uhle boxes are positioned in the felt runs to remove contaminants from and dewater the felts. This helps maintain the dewatering capacity of the felts and improves the overall cleanliness and runability of the press section.

Mechanical conditioning of IP showers, HP showers, water temperature
Chemical conditioning, acid, alkaline solvent **[10]**

TOTAL SECTION B: 75
GRAND TOTAL: 100

Copyright reserved