higher education & training

Department:
Higher Education and Training
REPUBLIC OF SOUTH AFRICA

NATIONAL CERTIFICATE: MULTIDISCIPLINARY DRAWING OFFICE PRACTICE

MECHANICAL AND DRAWING-OFFICE ORIENTATION N4

(8090184)

5 December 2023 (X-paper)
09:00–12:00

CLOSED-BOOK EXAMINATION

Drawing instruments may be used.

This question paper consists of 8 pages and a formula sheet.

253Q1G2305

Copyright reserved

DEPARTMENT OF HIGHER EDUCATION AND TRAINING
REPUBLIC OF SOUTH AFRICA

NATIONAL CERTIFICATE: MULTIDISCIPLINARY DRAWING OFFICE PRACTICE
MECHANICAL AND DRAWING-OFFICE ORIENTATION N4
TIME: 3 HOURS
MARKS: 100

INSTRUCTIONS AND INFORMATION

1. Answer all the questions.
2. Read all the questions carefully.
3. Number the answers according to the numbering system used in this question paper.
4. Start each section on a new page.
5. Use only a black or blue pen.
6. Write neatly and legibly.

Copyright reserved

QUESTION 1: DRAWING OFFICE ORIENTATION

1.1 Name any FIVE personal attributes of draughtspersons. (5)

1.2 Name THREE types of pictorial drawings that are done three-dimensionally. (3)

1.3 Explain what a multi-view drawing is. (3)

1.4 Define the term, *plastic art*. (1)

[12]

QUESTION 2: DRAWING-OFFICE LAYOUT AND EQUIPMENT

2.1 Explain what project numbering means and give an example of a number. (4)

2.2 Write down FOUR aspects regarding lighting that need to be considered before planning the layout of a drawing office. (4)

2.3 Write down TWO reasons why pre-printed grid sheets are used in a drawing office. (2)

[10]

QUESTION 3: ENGINEERING MATERIALS AND HEAT TREATMENT AND EQUIPMENT

3.1 Explain the annealing heat treatment process. (2)

3.2 Explain the term, *thermoplastics*, and give TWO examples thereof. (4)

3.3 Tungsten is ductile and has a high melting point. List FOUR effects of tungsten on steel. (4)

3.4 Low-carbon steel is used in the manufacturing industry. List FIVE uses of low-carbon steel. (5)

[15]

Copyright reserved

QUESTION 4: MACHINING

4.1 Boring is a machining process in which the interior surface of an object is machined by means of a cutting tool in a boring bar. Write down TWO cases where boring is normally done. (2)

4.2 The sketch below shows a drop-forging process used for the manufacture of an engineering component. Name the items labelled A, B and C. Write only the answer next to the letter (A–C) in the ANSWER BOOK.

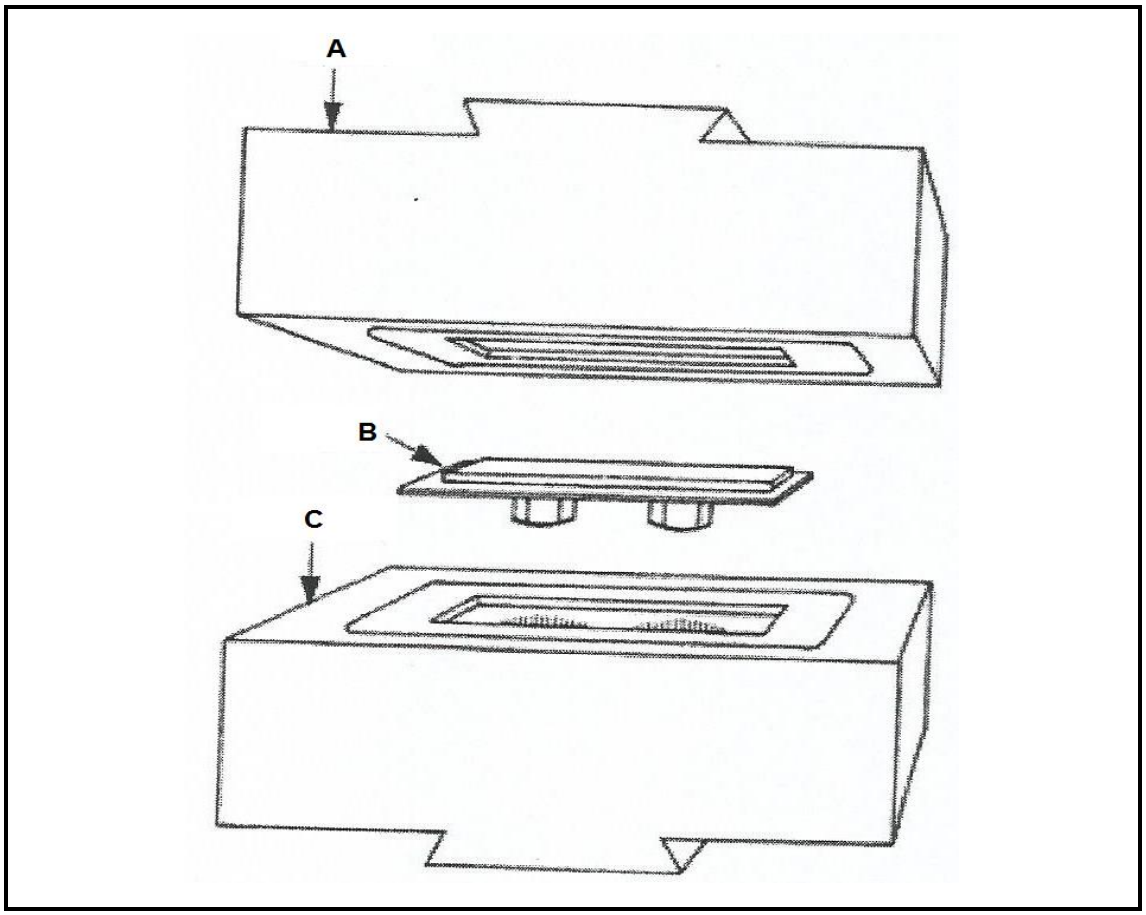

(3 × 1) (3)

4.3 With the aid of a labelled sketch, explain the interference fit showing the shaft, hole, maximum clearance and the minimum clearance. (5)
[10]

QUESTION 5: MEASURING INSTRUMENTS

5.1 List FOUR common types of micro metres used in an engineering workshop. (4)

5.2 The sketch below shows a measurement being taken. Name the items labelled A, B, C and D. Write only the answer next to the letter (A–D) in the ANSWER BOOK.

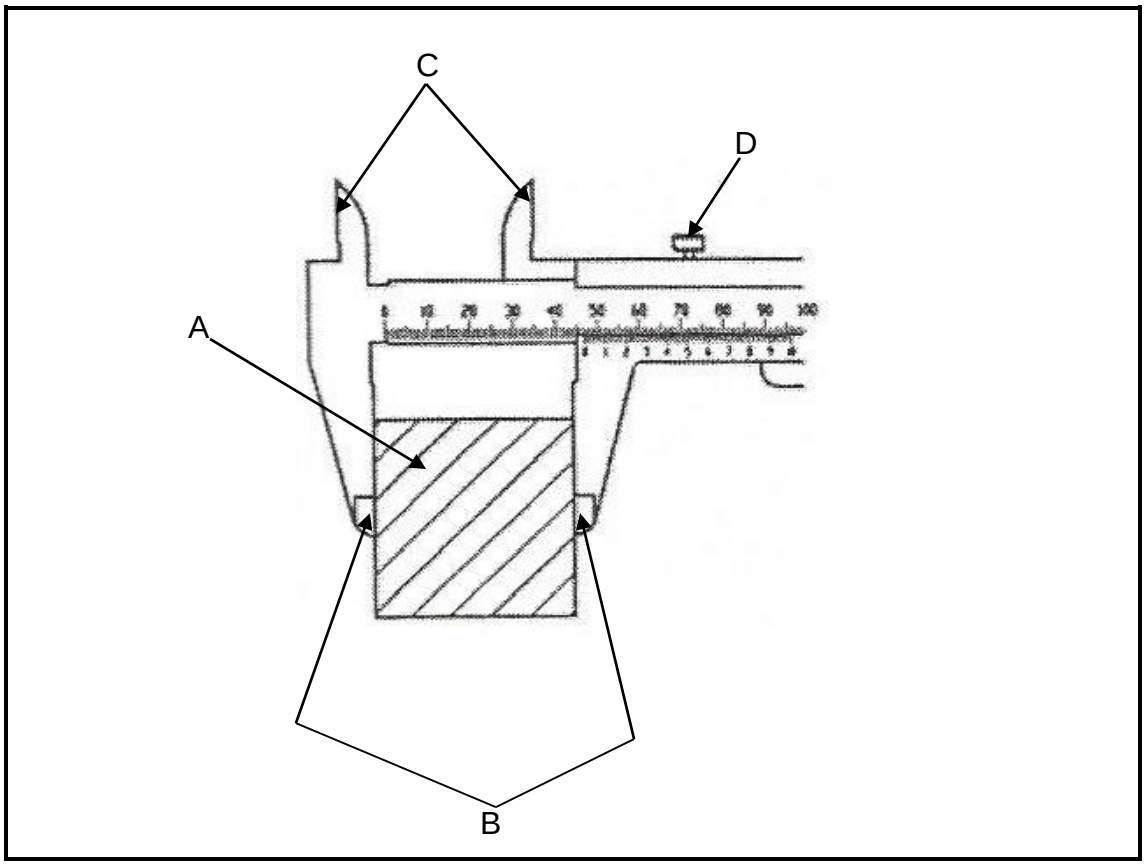

(4 × 1) (4)

5.3 An exact drawing of a 0-25 mm micro metre is shown with a reading. Write down the reading with the units next to the question number (5.3) in the ANSWER BOOK.

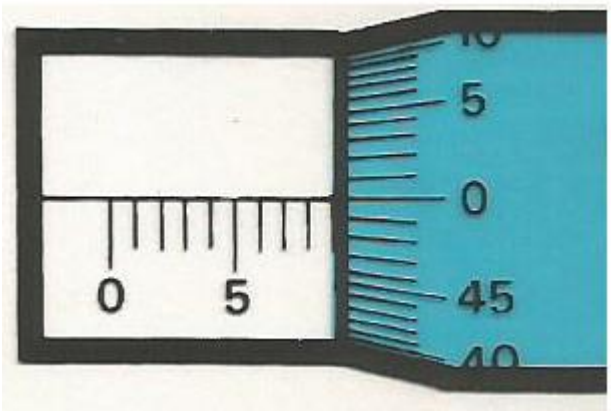

(2)
[10]

QUESTION 6: KEYS, PULLEYS, CLUTCHES, COUPLINGS AND SCREW THREADS

6.1 The sketch below shows a half sectional view of a universal coupling. Name the items labelled A, B, C, D, E and F. Write only the answer next to the letter (A–F) in the ANSWER BOOK.

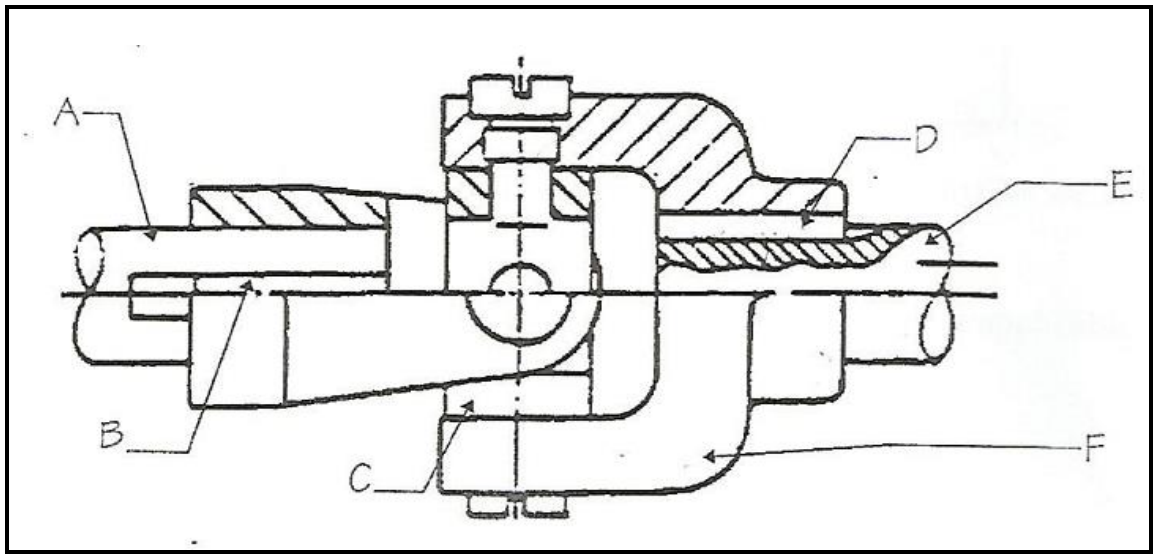

(6 × 1) (6)

6.2 Draw and explain the use and securing of a single-headed feather key. (3)

[9]

QUESTION 7: BEARINGS AND LUBRICATION

7.1 With the aid of a cross-sectional sketch, explain a footstep bearing showing the vertical shaft, cast-iron body and wearing or supporting discs. (5)

7.2 Name TWO common gravity feet lubricators. (2)

7.3 Write down any THREE factors on the selection of the use of anti-friction bearings. (3)

[10]

Copyright reserved

QUESTION 8: GEAR DRIVES

8.1 Explain the operation of an internal gear system with the aid of a diagram. (3)

8.2 The following information is given with regard to an involute gear:

PCD = 150 mm
Number of teeth = 26

Calculate the following with the aid of the formulae sheet provided:

8.2.1 The pitch (3)

8.2.2 The circular tooth thicknesses (2)

8.3 Write down TWO advantages of a planetary system of gears. (2)
[10]

QUESTION 9: VALVES, PUMPS AND PIPE FITTINGS

9.1 Study the drawing of a pump used in the industry shown below and then answer the questions that follow:

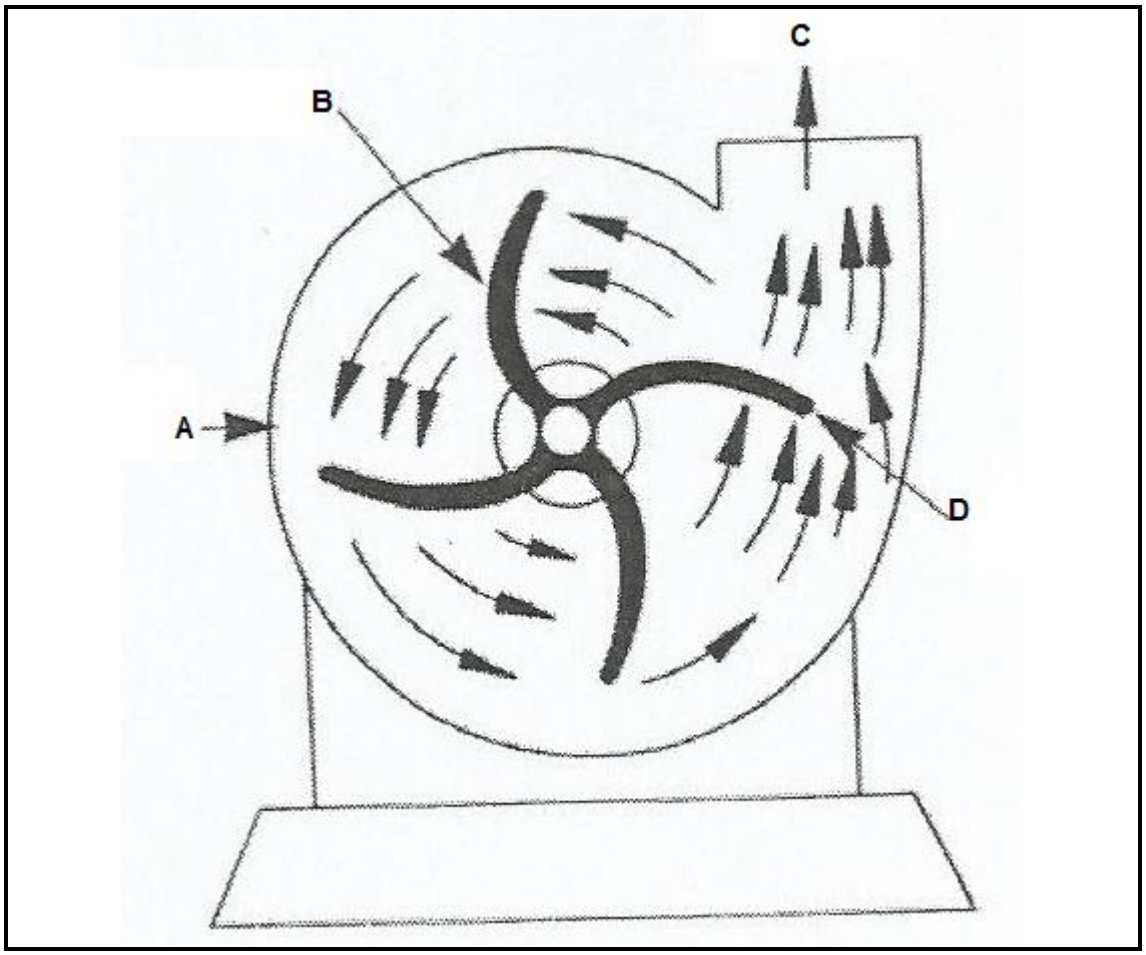

9.1.1 Provide the name of the pump shown in the drawing. (1)

Copyright reserved

9.1.2 Name the components or process indicated by the alphabet letters by writing only the answer next to the letter (A–D) in the ANSWER BOOK. (4 × 1) (4)

9.2 Differentiate between a *rotary control valve* and a *relief valve*. (2)

9.3 List any FOUR causes of rotary pumps failing to deliver liquids. (4)

9.4 Draw a sketch of an expansion diaphragm showing the pipe and the diaphragm. (3)

[14]

TOTAL: 100

Copyright reserved

FORMULA SHEET

FORMULA FOR INVOLUTE GEAR TEETH

Terminology used

T = number of teeth
PCD = Pitch – circle diameter
CP = circular pitch
M = module
T = tooth thickness
N = number of teeth

Formula	
To find pitch (p)	$p = \frac{\pi \times PCD}{T}$
To find circular pitch (p)	$p = \pi \times M$
To find module (m)	$m = \frac{PCD}{T}$
To find circular tooth thickness (t)	t = $\frac{p}{2}$
To find addendum	$addendum = m$
To find dedendum	$dedendum = 1{,}25 \times m$
To find fillet radius	$fillet\ radiius = 0{,}3 \times m$

Copyright reserved