higher education & training

Department:
Higher Education and Training
REPUBLIC OF SOUTH AFRICA

MARKING GUIDELINE

NATIONAL CERTIFICATE

MECHANICAL AND DRAWING-OFFICE ORIENTATION N4

5 December 2023

This marking guideline consists of 7 pages.

Copyright reserved

QUESTION 1

1.1
- A draughtsperson must be methodical and be able to work accurately, neatly, tidily and logically.
- S/he must be able to communicate verbally and in writing with all levels, from top management to shop floor workers.
- S/he must be able to use measuring instruments.
- S/he must have a functional knowledge of the field.
- S/he must be able to visualise shapes and sizes in three dimensions. (5)

1.2
- Isometric drawing
- Oblique drawing
- Perceptive drawing (3)

1.3
- A multi-view two-dimensional (2D) drawing shows the actual shape of an object from different directions that are 90 degrees apart.
- A typical multi-view sketch will include views from the top, front and right-hand side.
- The back, bottom and left-hand side view are optional depending on the complexity of the object's shape. (3)

1.4 Art forms which involve physical manipulation of plastic medium by moulding or modelling such as sculpture or ceramics.✓✓ (1)
[12]

QUESTION 2

2.1
- If an organisation needs to keep drawings from each different project together, a project numbering system might be the best.
- In this system, a code may be allocated to each project and drawings could be numbered using sequential or block numbering in addition to the project code.
- An example of a project to build a shopping mall may have a code MALL01.
- Each drawing for the mall would have a number such as MALL01/0029, which would be the twenty ninth drawing for the mall. (4)

2.2
- Natural lighting
- Artificial lighting
- Bright light for drawing boards
- Subdued light for computer rooms (4)

2.3
- It makes freehand drawing easier
- It helps in doing the drawings quicker (2)
[10]

QUESTION 3

3.1 Annealing consists of heating a metal to a specific temperature and then cooling it at a rate that will produce a refined microstructure, either fully or partially, separating the constituents.✓✓ (2)

3.2 Thermoplastics are plastics which have the ability to be repeatedly changed into a plastic (semi-liquid) state.✓

Examples:
Perspex✓
PVC✓
Nylon✓ (4)

3.3
- It gives the steel a fine, dense grain structure.
- It increases the strength and toughness.
- Increases the wear resistance.
- Increases the resistance to heat. (4)

3.4
- Structural sections such as girders and reinforcing rods
- Forging and drop forging
- Metal sheets and plates
- Rods and bars
- Seam-welded tubes (5)

[15]

QUESTION 4

4.1
- Holes in castings that are cast undersize and then bored to the required size.
- To machine big holes or cylindrical cavities (hollows) in objects. Ordinary drills are not large enough or suitable for this type of work.
- To machine holes, cylinders, etc. accurately according to the tolerances, and with a good finish. (Any 2 × 1) (2)

4.2 A – Top die
B – Forging
C – Bottom die (3)

4.3 An interference fit is a fit that always provides interference.✓✓

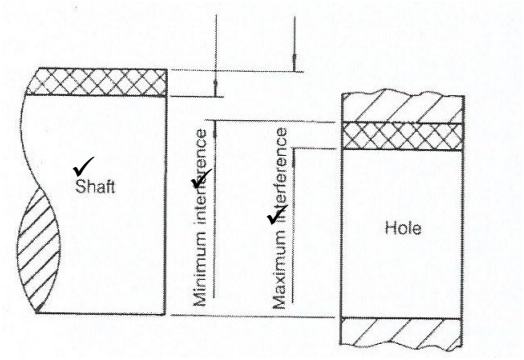

(5)
[10]

QUESTION 5: MEASURING INSTRUMENTS

5.1
- Outside micrometre
- Inside micrometre
- Depth micrometre
- Digital micrometre (4)

5.2 A – Workpiece
B – External measuring jaws
C – Internal measuring jaws
D – Locking screw (4 × 1) (4)

5.3 9 mm✓✓ (2)
[10]

QUESTION 6: KEYS, PULLEYS, CLUTCHES, COUPLINGS AND SCREW THREADS

6.1 A – Shaft out of align
B – Key way
C – Centre block
D – Feather key
E – Driving shaft
F – Driving yoke (6 × 1) (6)

6.2 A feather key is a special type of parallel key which allows relative axial movement between the hub and the shaft.✓
The key is secured in position by means of a screw.

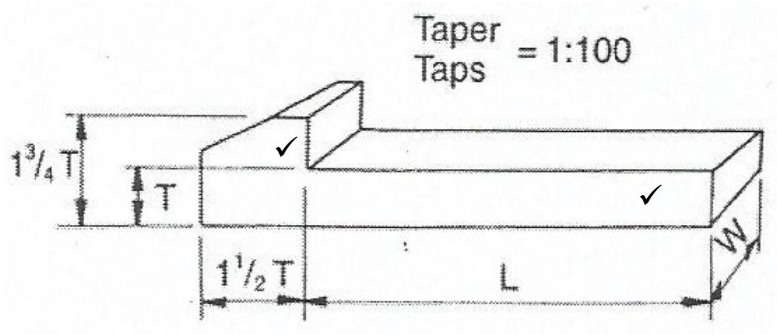

(One mark for an appropriate explanation and two marks for the correct shape of the key.) (3)
[9]

QUESTION 7: BEARINGS AND LUBRICATION

7.1 Footstep bearings are often called pivot or vertical thrust bearing which support shafts operating in a vertical position.✓

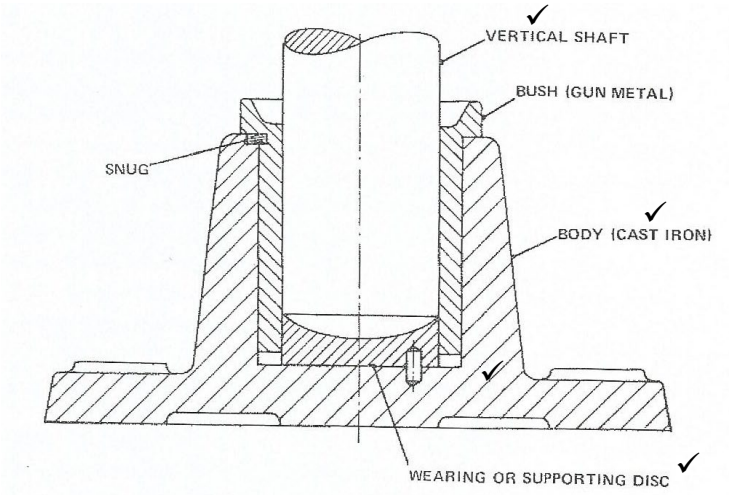

(One mark for the appropriate sketch, three marks for the labels and one mark for the explanation.) (5)

7.2
- Siphon-wick lubricator
- Sight-feed lubricator (2)

7.3
- Magnitude of the load
- Acting direction of the load
- Available space around the bearing
- Any misalignment between the shaft and the housing
- The speed at which the bearing must operate (Any 3 × 1) (3)

[10]

QUESTION 8: GEAR DRIVES

8.1 Internal gears may be used for transmitting motion between parallel shafts.✓ An internal wheel and a pinion rotate in the same direction. Internal gears are very useful for the composition of a planetary system of gear drives.✓

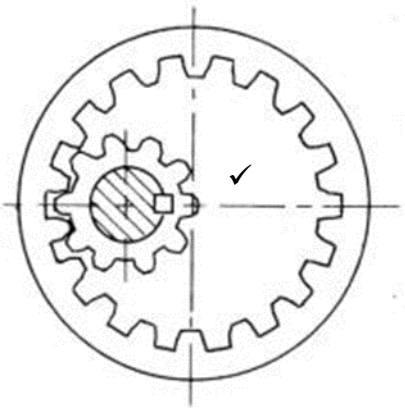

(3)

8.2 8.2.1

$$p = \frac{\pi \times PCD}{T} \checkmark$$
$$= \frac{\pi \times 150}{26} \checkmark$$
$$= 19 \text{ mm} \checkmark$$

(3)

8.2.2

$$t = \frac{19}{2}$$
$$= \frac{13}{2} \checkmark$$
$$= 9{,}5 \text{ mm} \checkmark$$

(2)

8.3
- The gears are always in mesh.
- Planetary gears are not subjected to high side loads like ordinary spur gear drives when under load.
- More teeth working at the same time, giving a stronger, safer and more reliable drive. (Any 2 × 1) (2)

[10]

QUESTION 9: VALVES, PUMPS AND PIPE FITTINGS

9.1 9.1.1 Centrifugal pump (1)

9.1.2
A – Casing
B – Water inlet
C – Delivery
D – Impeller (4 × 1) (4)

9.2
- A rotary control valve is used to control the direction of fluid flow.
- A relief valve is installed between the pump and the reservoir to prevent abnormal pressure building up in the system. (2)

9.3
- Suction head too large.
- Strainer is choked and therefore liquid cannot flow to the pump casing.
- The pump has not been primed properly.
- There are air leakages at inlet pipes and packed stuffing boxes.
- The pump might be badly worn or have some or other mechanical fault.
- The strainer is not properly submerged under the liquid thus permitting air to be drawn in with water.
- Speed of pump too low to build up pressure. (Any 4 × 1) (4)

9.4

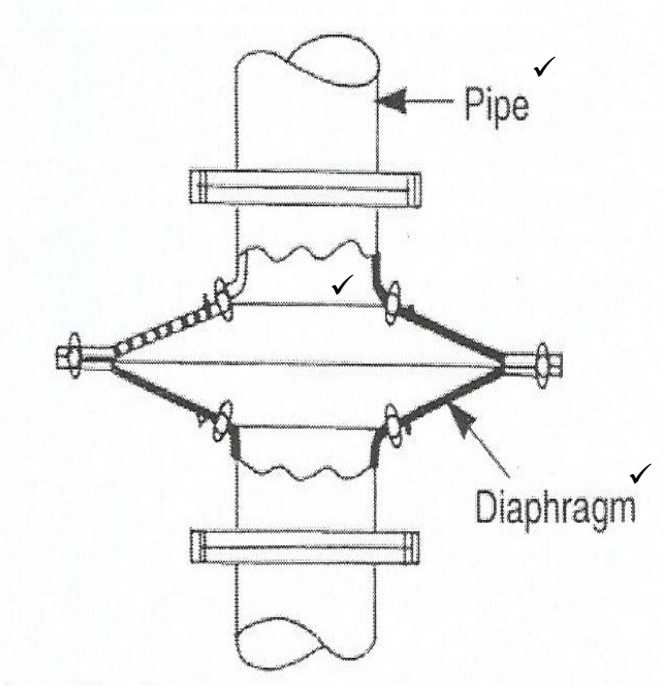

(3)
[14]

TOTAL: 100

Copyright reserved