higher education & training

Department:
Higher Education and Training
REPUBLIC OF SOUTH AFRICA

MARKING GUIDELINE

NATIONAL CERTIFICATE

MECHANICAL DRAUGHTING N4

20 November 2023

This marking guideline consists of 7 pages.

Copyright reserved

QUESTION 1

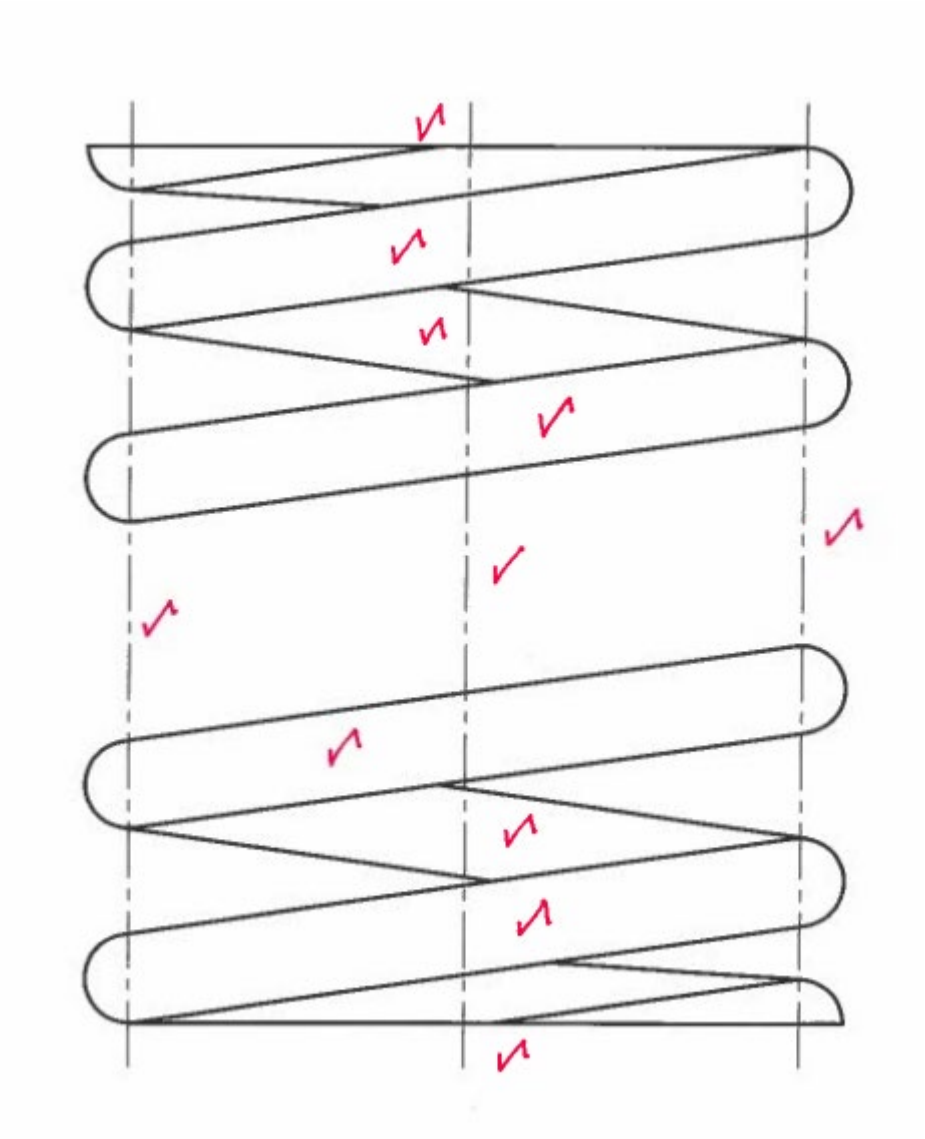

MARK ALLOCATION	
Correctness	6
Line work	2
Accuracy	2
Total	**10**

[10]

QUESTION 2

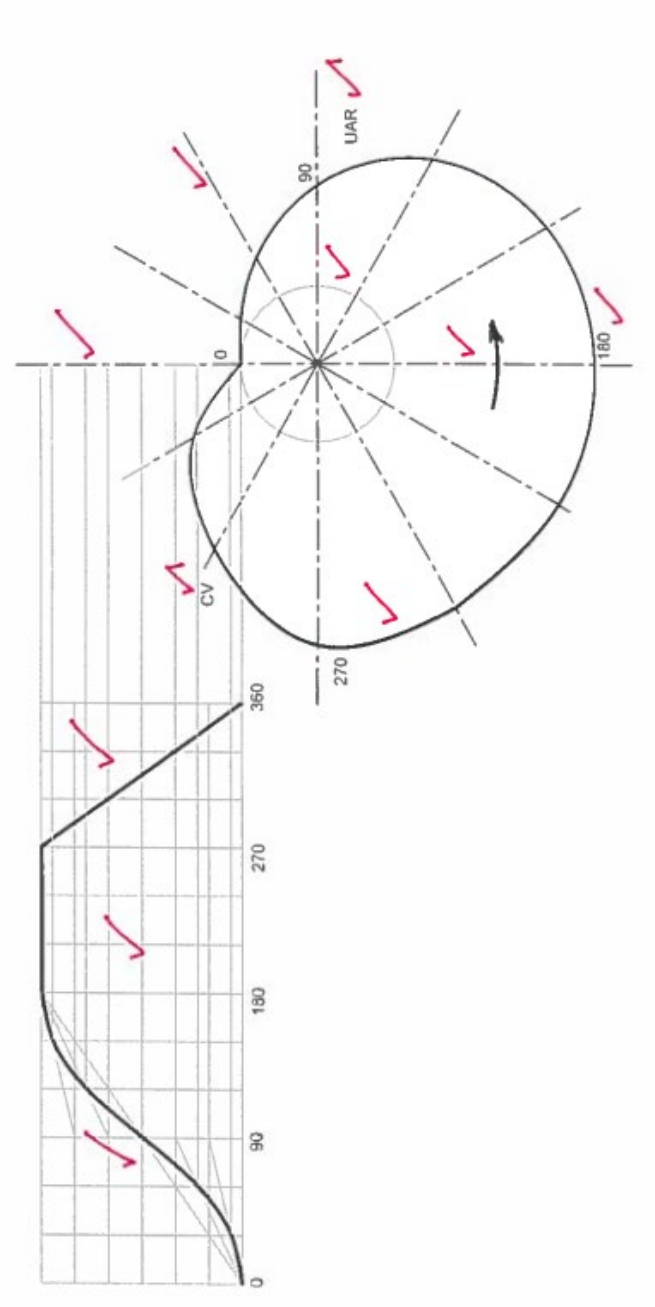

MARK ALLOCATION		
Corr.	D. Diagram	3
	Cam profile	7
Line work		3
Accuracy		2
TOTAL		**15**

[15]

QUESTION 3

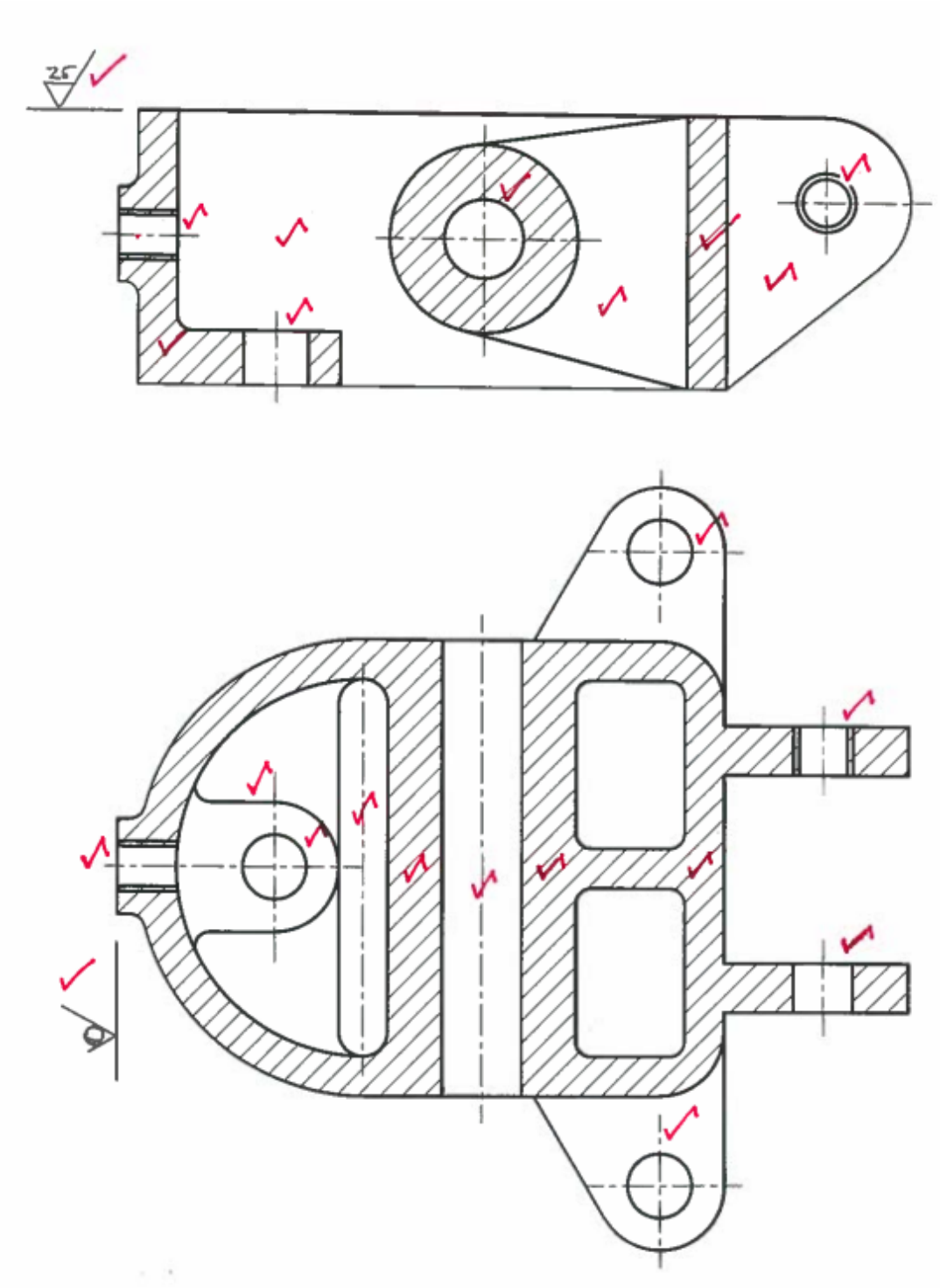

MARK ALLOCATION	
Correctness: Front View	6
: Left View	6
Line work	3
Accuracy	3
Symbols	2
Total	**20**

[20]

QUESTION 4

4.1

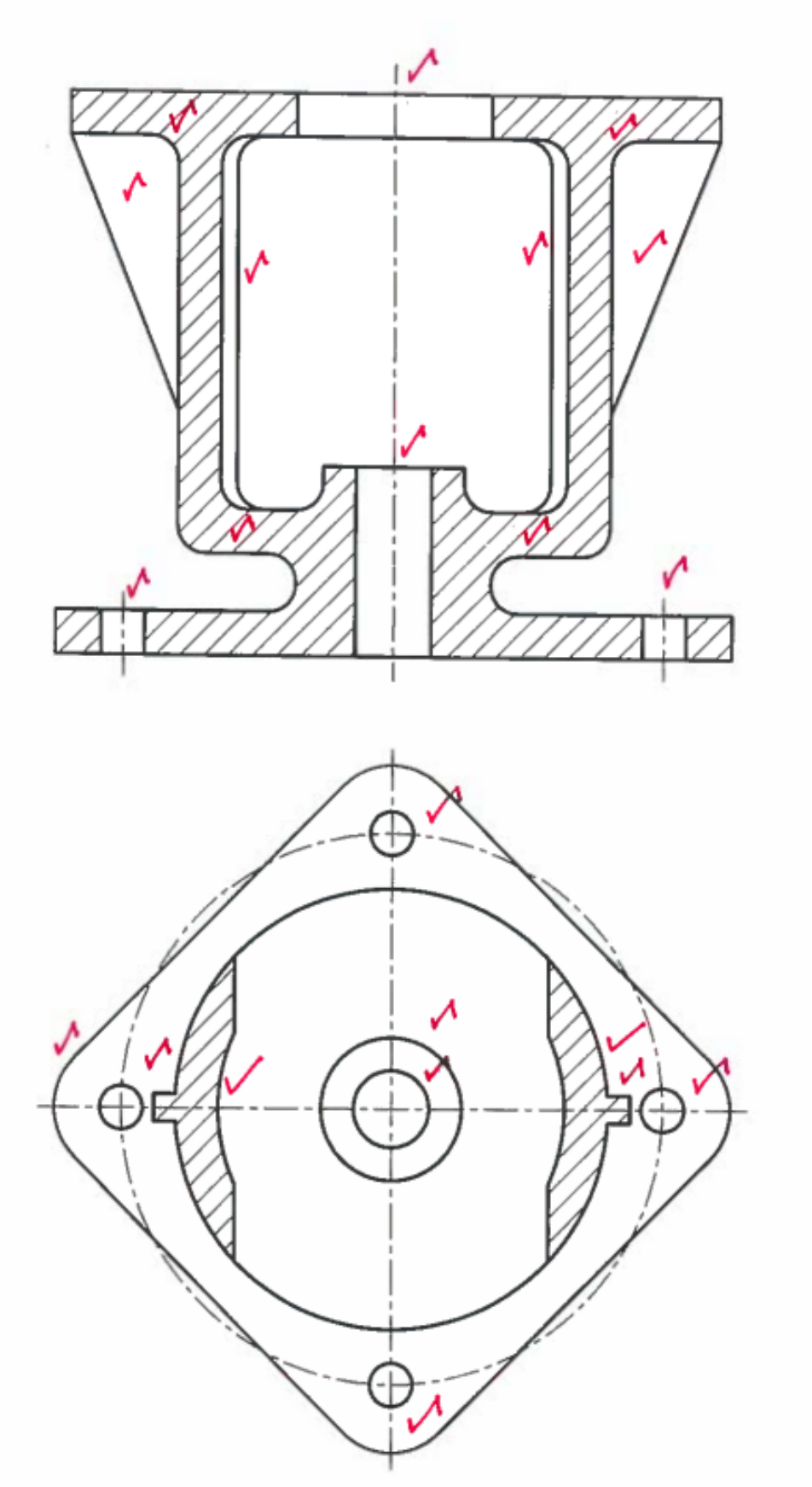

(8)

(8)

4.2

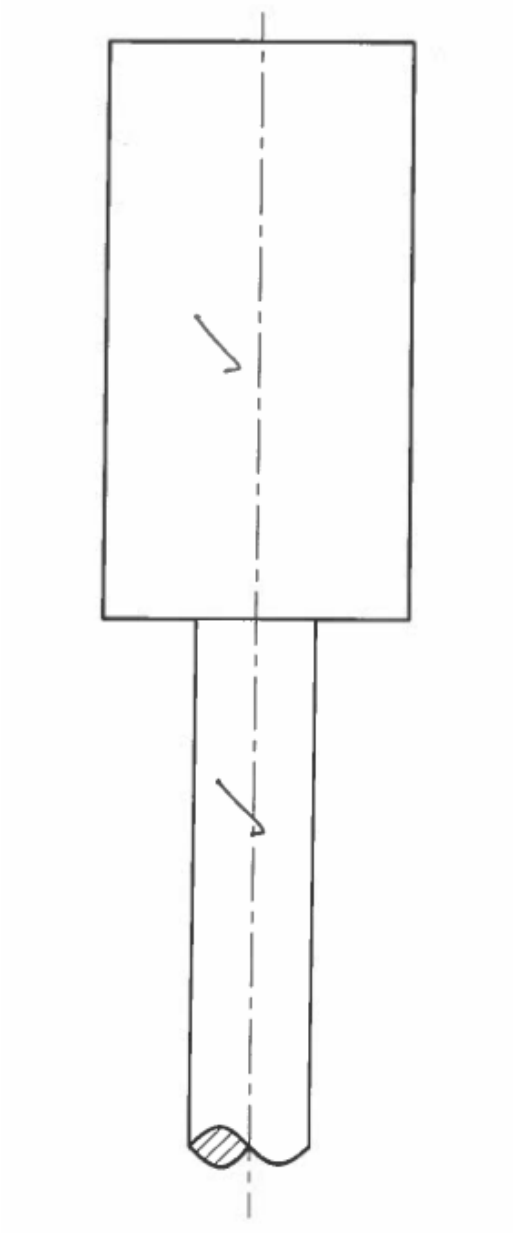

MARK ALLOCATION		
ITEM 1	Front view	6
	Top view	6
ITEM 3	Front view	2
Line-work		3
Accuracy		3
Total		**20**

(4)
[20]

QUESTION 5

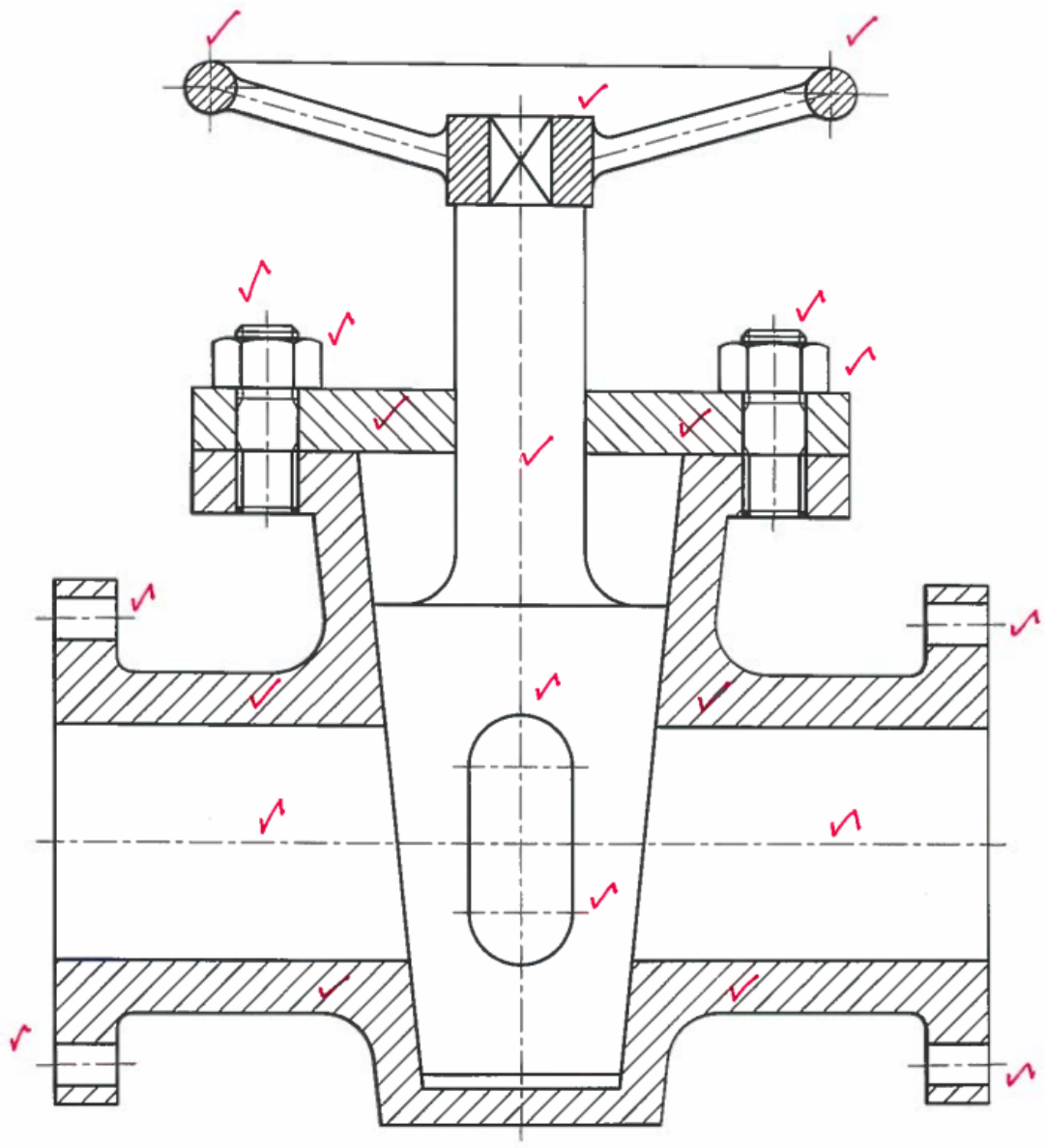

MARK ALLOCATION	
Correctness	16
Line work	4
Accuracy	4
Item Nos	3
Part list	3
Total	**20**

[35]

TOTAL: 100

Copyright reserved