higher education & training

Department:
Higher Education and Training
REPUBLIC OF SOUTH AFRICA

NASIENRIGLYN

NASIONALE SERTIFIKAAT

LOGIKASTELSELS N4

29 November 2022

Hierdie nasienriglyn bestaan uit 8 bladsye.

Kopiereg voorbehou

VRAAG 1

1.1 8 (1)

1.2 2 (1)

1.3 10111101_2

01000010 ✓

$+1$

$\overline{\qquad\qquad}$

01000011 ✓ (2)

1.4 $F = \overline{A+B}$ ✓

A	B	F
0	0	1
0	1	0
1	0	0
1	1	0

✓

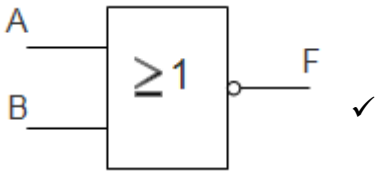

✓ (3)

1.5 Logika 0 – 0 V
Logika 1 – 5 V (2)

1.6 'n Volledige opteller het 'n oordragtoevoer en 'n halwe opteller het geen oordragtoevoer nie. (1)

1.7 1.7.1 A
1.7.2 1
1.7.3 $\overline{A \oplus B}$ ✓
1.7.4 0

(4 × 1) (4)

1.8 1.8.1

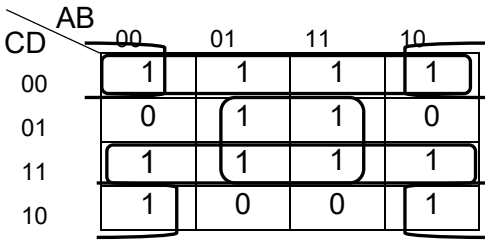

✓

$F = \overline{C}\overline{D} + CD + B\overline{D} + \overline{B}\overline{D}$

$= \overline{C \oplus D} + \overline{B \oplus D}$ ✓

1.8.2

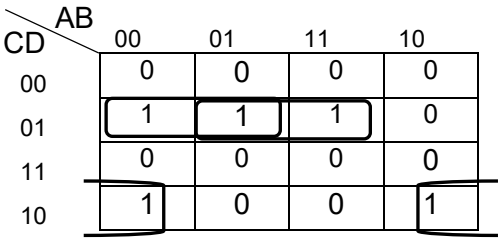

✓

$F = \overline{A}\,\overline{C}D + B\,\overline{C}\,\overline{D} + \overline{B}C\overline{D}$ ✓

1.8.3

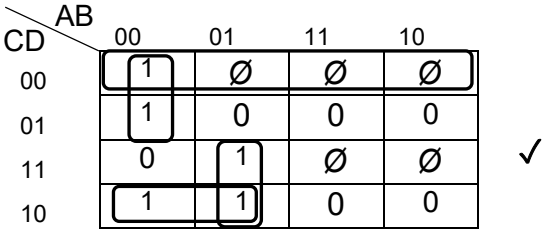

✓

$F = \overline{C}\,\overline{D} + \overline{A}\,\overline{B}\,\overline{C} + \overline{A}BC + \overline{A}C\overline{D}$ ✓

(3 × 2) (6)
[20]

VRAAG 2

2.1 2.1.1 $12,75_{10}$ - F,D_{16}

$12,75_{10} = 1100,11_2$ ✓½

$C,D_{16} = 1111,1101_2$ ✓½

$$\begin{array}{r} 1100,1100 \\ -1111,1101 \end{array}$$ ✓

$$\begin{array}{rl} & 1100,1100 \\ 0c & +0000,0010 \\ \square & 1100,1110 \\ = & -0011,0001 \end{array}$$ ✓ ✓ ✓

$-0011,0001_2 = -3,1_{16}$ ✓

2.1.2 $4C,A_{16} \times 2,4_8$

$4C,A_{16} = 01001100,1010_2$ ✓½

$2,4_8 = 010,100_2$ ✓½

$$\begin{array}{r} 1001100,101 \\ \times \quad 11,100 \\ \hline 100110010100 \quad ✓ \\ + \quad 10011001010000 \quad ✓ \\ \hline 10111111,100100 \quad ✓✓ \end{array}$$

$10111111,100100 = 277,44_8$ ✓

2.1.3 $731,2_8 \div 16,25_{10}$

$731,2_8 = 111011001,010_2$ ✓½

$16,25_{10} = 10000,01_2$ ✓½

$$\begin{array}{r} 11101,0001 \quad ✓ \\ 1000001 \overline{)11101100101,0000} \\ \underline{-1000001} \quad ✓ \\ 1101010 \\ \underline{-1000001} \quad ✓ \\ 1010011 \\ \underline{-1000001} \\ 1001001 \\ \underline{-1000001} \\ 10000000 \\ \underline{-1000001} \quad ✓ \\ 111111 \end{array}$$

$101,0001 = 5,0625_{10}$ ✓

$= 5\frac{1}{16}_{10}$

(3 × 6) (18)

2.2 2.2.1 123_{10}
Binêre 1111011_2✓
Gray 1000110✓✓ (3)

2.2.2 75_{10} (2)

2.2.3 50_{10} (2)
[25]

VRAAG 3

3.1 3.1.1

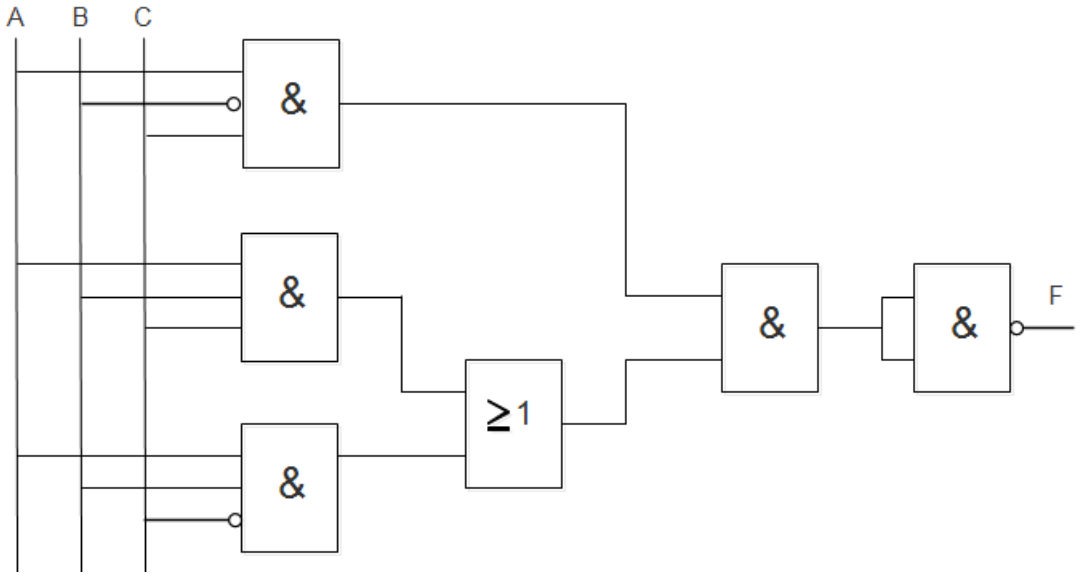

3.1.2

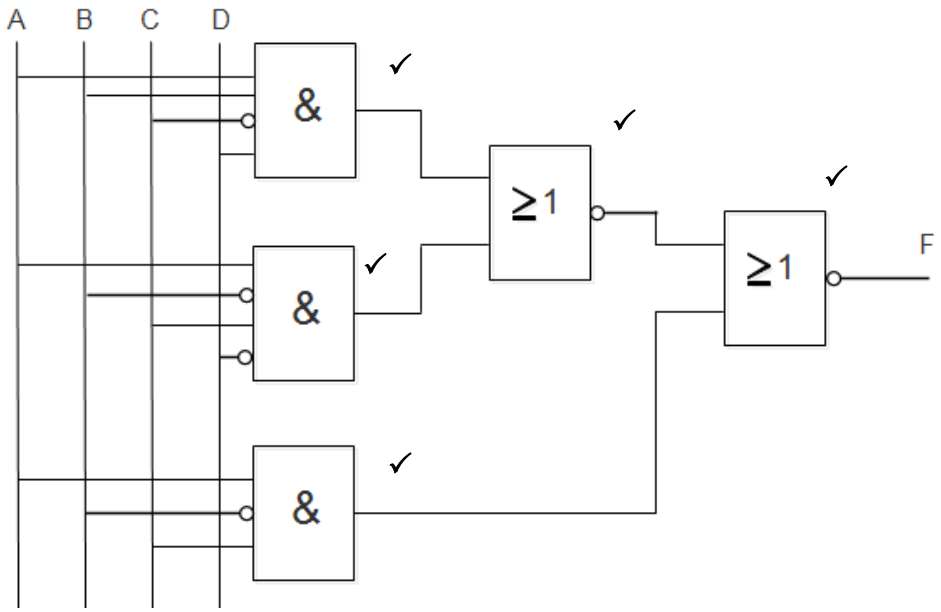

3.1.3

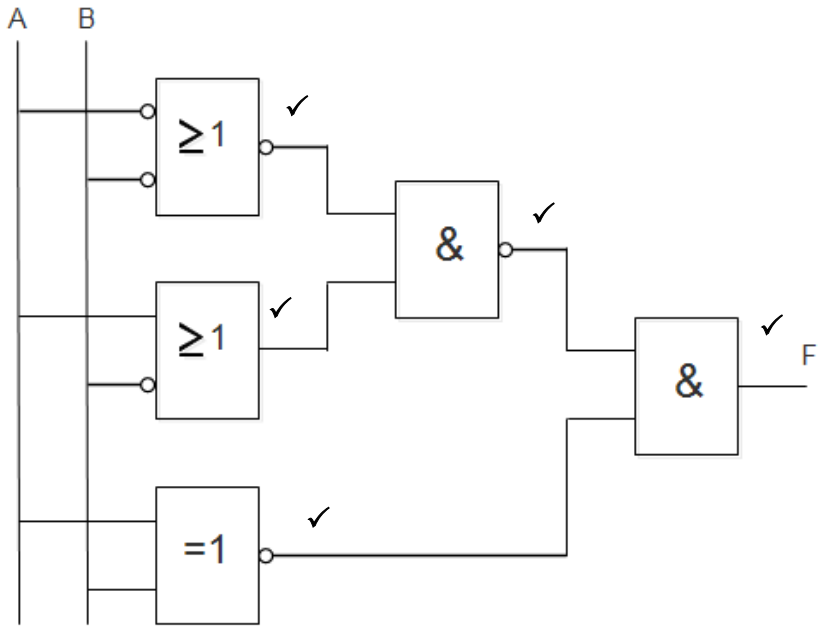

✓

(3 × 5) (15)

3.2 3.2.1

$$F = \overline{\overline{(A\bar{B}C + AB\bar{C})} \cdot \overline{(A\bar{B}\bar{C} + ABC)}}$$

$= A\bar{B}C + AB\bar{C} + A\bar{B}\bar{C} + ABC$ ✓

$= A\bar{B} + AB$ ✓

$= A(\bar{B} + B)$ ✓

$= A$ ✓ (4)

3.2.2

$$F = \overline{\overline{(A + \bar{B} + \bar{C})(\bar{A} + C)} \cdot \overline{(A + B)}}$$

$= (A + \bar{B} + \bar{C})(\bar{A} + C) + (A + B)$ ✓

$= A\bar{B} + \bar{A}\bar{C} + AC + \bar{B}C + A + B$ ✓

$= A(\bar{B} + C + 1) + \bar{A}\bar{C} + \bar{B}C + B$ ✓

$= A + \bar{A}\bar{C} + B + C$ ✓

$= A + \bar{C} + B + C$ ✓

$= A + B + 1$

$= 1$ ✓ (6)

[25]

VRAAG 4

Toevoere (8421 BCD)				Afvoere (GRAY)			
A	B	C	D	W	X	Y	Z
0	0	0	0	0	0	0	0
0	0	0	1	0	0	0	1
0	0	1	0	0	0	1	1
0	0	1	1	0	0	1	0
0	1	0	0	0	1	1	0
0	1	0	1	0	1	1	1
0	1	1	0	0	1	0	1
0	1	1	1	0	1	0	0
1	0	0	0	1	1	0	0
1	0	0	1	1	1	0	1
1	0	1	0	1	1	1	1
1	0	1	1	1	1	1	0
1	1	0	0	1	0	1	0
1	1	0	1	1	0	1	1
1	1	1	0	1	0	0	1
1	1	1	1	1	0	0	0
				✓	✓	✓	✓

Leerder moet Karnaugh-diagram wys en korrekte vereenvoudiging vir 1 punt.
Ken ½ punt toe as Karnaugh-diagram korrek is, maar die vereenvoudiging is verkeerd.

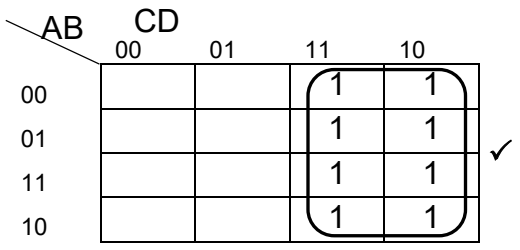

$W = A$ ✓

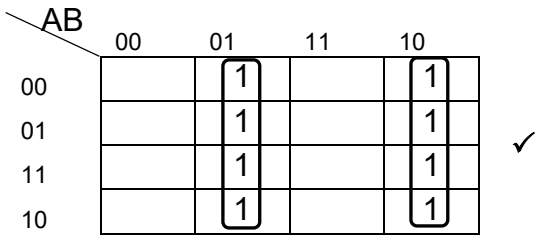

$X = \overline{A}B + A\overline{B}$ ✓ $= A \oplus B$ ✓

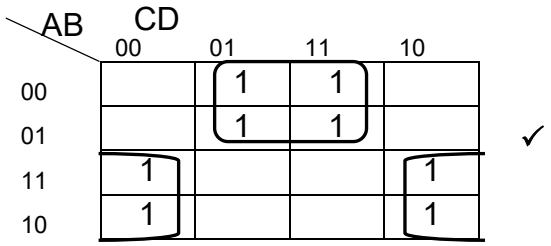

$Y = B\overline{C} + \overline{B}C$ ✓
$= B \oplus C$ ✓

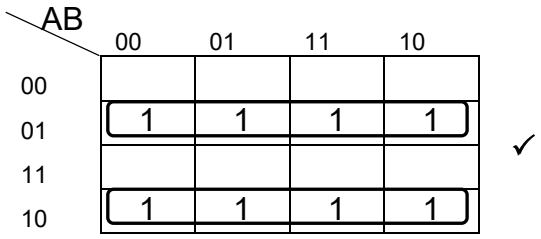

$Z = \overline{C}D + C\overline{D}$ ✓
$= C \oplus D$ ✓

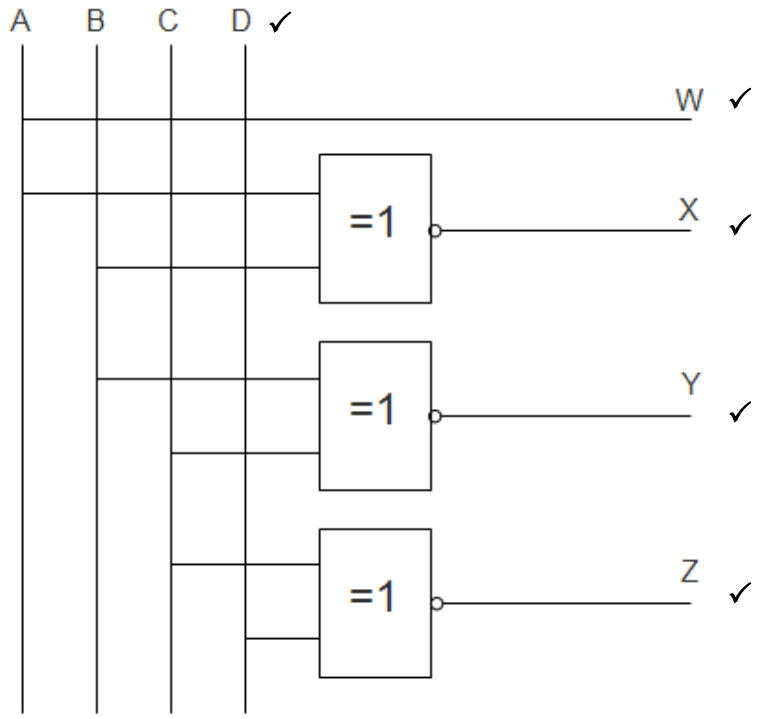

[20]

VRAAG 5

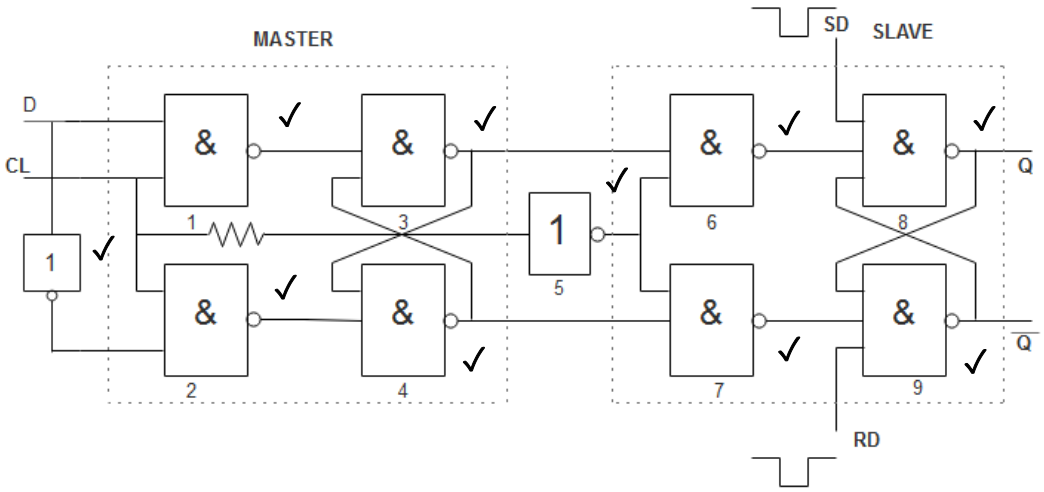

[10]

TOTAAL: 100

Kopiereg voorbehou