higher education & training

Department:
Higher Education and Training
REPUBLIC OF SOUTH AFRICA

MARKING GUIDELINE

NATIONAL CERTIFICATE

LOGIC SYSTEMS N4

6 December 2023

This marking guideline consists of 10 pages.

Copyright reserved

✓ = 1 mark $\surd$ = ½ mark

QUESTION 1

1.1 0 ; 1 (1)

1.2 7 (1)

1.3 4 (1)

1.4 A full adder has a carry input and a half adder has no carry input. (1)

1.5 1.5.1 Random-access memory
1.5.2 Read-only memory
1.5.3 Compact disc rewritable
(3 × 1) (3)

1.6

A	B	F
0	0	0
0	1	1
1	0	1
1	1	0

✓

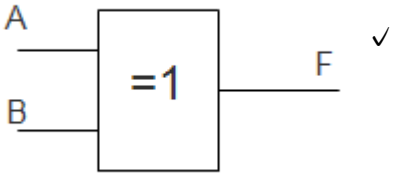

✓

$F = A \oplus B$ ✓ (3)

1.7 1.7.1 $A \oplus B$ ✓
1.7.2 $AB + AC$ ✓
1.7.3 A ✓
1.7.4 1 ✓
(4 × 1) (4)

1.8 1.8.1

CD \ AB	00	01	11	10
00	1	Ø	Ø	Ø
01	1	Ø	Ø	Ø
11	1	1	Ø	Ø
10	1	1	0	0

✓

$F = \overline{A}$ ✓

1.8.2

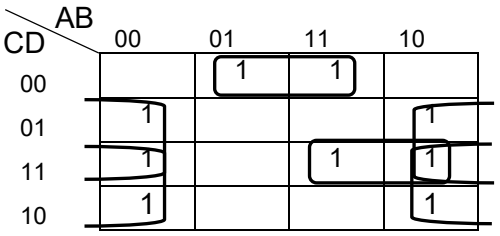

✓

$F = B\bar{C}\bar{D} + ACD + \bar{B}D + \bar{B}C$ ✓

1.8.3

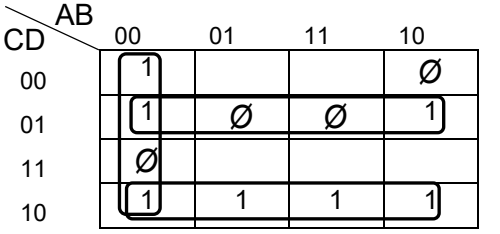

✓

$F = \bar{C}D + C\bar{D} + \bar{A}\bar{B}$ ✓½ $= C \oplus D + \bar{A}\bar{B}$ ✓½

(3 × 2) (6)
[20]

QUESTION 2

2.1 2.1.1 $75,25_{10} - 12,3_8$

$75,25_{10} = 1001011,01_2$ ✓
$12,3_8 = 001010,011_2$ ✓

$$\begin{array}{r} 1001011,010 \\ -0001010,011 \\ \hline \end{array}$$

$$\begin{array}{r} 1110101,100 \text{ ✓} \\ + \qquad\quad 1 \\ \hline 1110101,101 \text{ ✓} \\ 1c + 1001011,010 \\ \hline 1000000,111 \text{ ✓} \end{array}$$

$1000000,111_2 = 64,875_{10}$ ✓ (6)

2.1.2 $53,5_{10} \times 1,3_8$

$53,5_{10} = 110101,1_2$ ✓

$1,3_8 = 001,011_2$ ✓

$$\begin{array}{rr} & 110101,100 \\ \times & 001,011 \\ \hline & 110101100 \\ & 1101011000 \\ + & 110101100000 \\ \hline & 1001001,100100 \end{array}$$ ✓ ✓

$1001001,1001 = 49,9_{16}$ ✓ (6)

2.1.3 $A7,D_{16} \div 2,4_8$

$A7,D_{16} = 10100111,1101_2$ ✓

$2,4_8 = 010,100_2$ ✓

$$\begin{array}{r} 1000011,001 \checkmark \\ 10100 \overline{)10100111110,100} \\ \underline{-10100} \checkmark \\ 11111 \\ \underline{-10100} \\ 10110 \\ \underline{-10100} \\ 10100 \\ \underline{-10100} \checkmark \end{array}$$

$1000011,001 = 67,125_{10}$ ✓

(6)

2.2 American Standard Code for Information Interchange (2)

2.3 f - 110 0110 ✓
A - 100 0001 ✓
5 - 011 0101 ✓
T - 101 0100 ✓
* - 010 1010 ✓ (5)

[25]

QUESTION 3

3.1 3.1.1

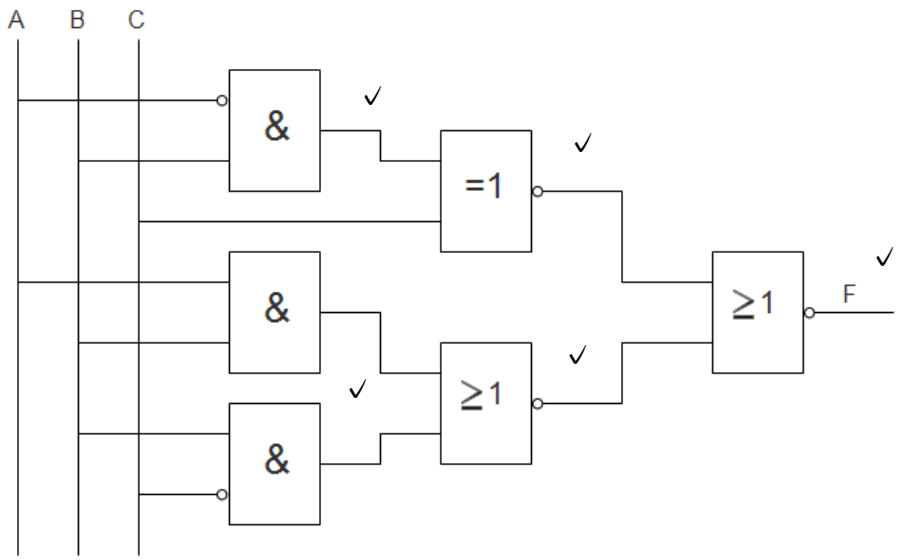

(5)

3.1.2

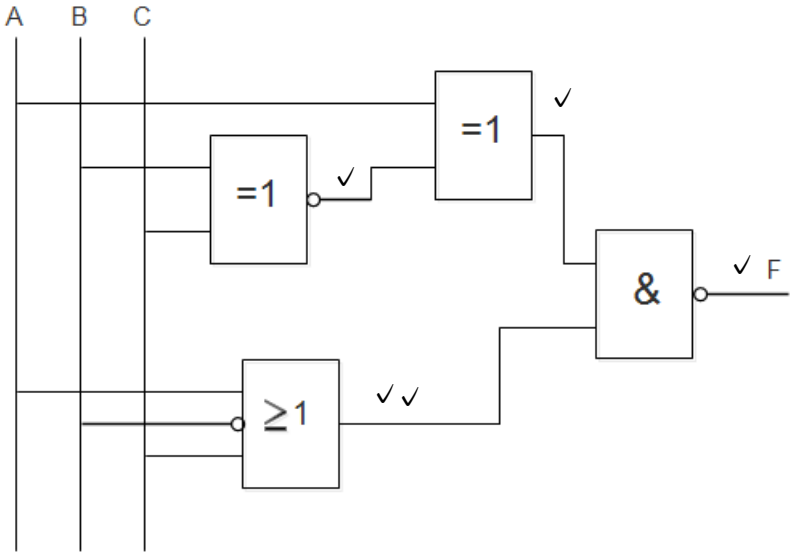

(5)

3.1.3

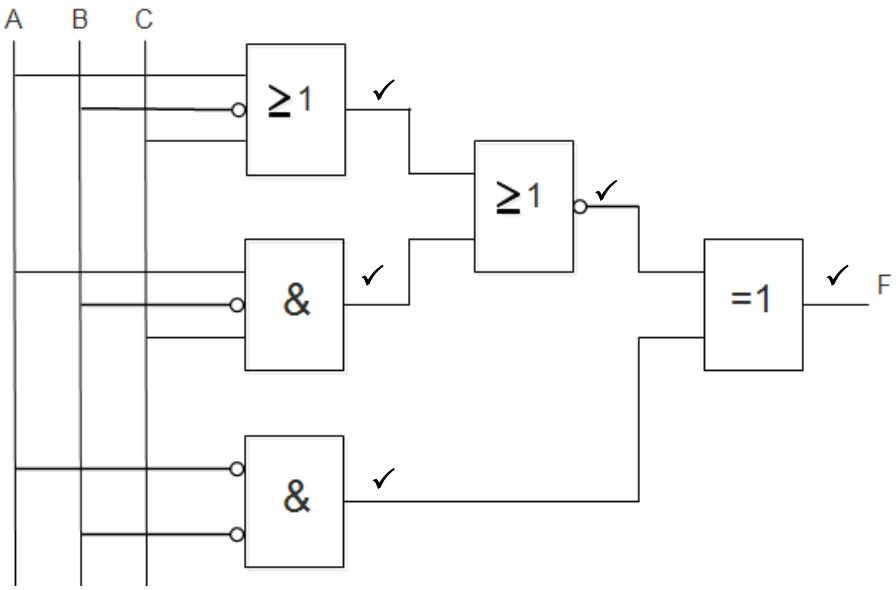

(5)

3.2 3.2.1

A	B	C	F
0	0	0	0
0	0	1	0
0	1	0	0
0	1	1	1 ✓
1	0	0	0
1	0	1	1
1	1	0	1 ✓
1	1	1	1

(2)

3.2.2

$$F = \overline{A}BC + A\overline{B}C + AB\overline{C} + ABC$$
$$= \overline{A}BC + A\overline{B}C + AB(C + \overline{C}) \quad ✓$$
$$= \overline{A}BC + A\overline{B}C + AB \quad ✓$$
$$= \overline{A}BC + A(B + \overline{B}C)$$
$$= \overline{A}BC + BB + AC \quad ✓$$
$$= B(\overline{A}C + A) + AC$$
$$= AB + BC + AC \quad ✓$$
$$= \overline{\overline{AB + BC + AC}}$$
$$= \overline{\overline{AB} \cdot \overline{BC} \cdot \overline{AC}} \quad ✓$$

(5)

3.2.3

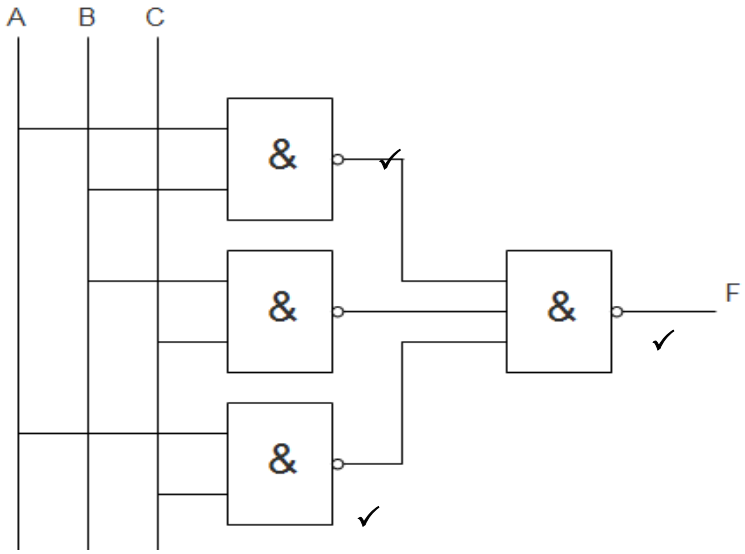

(3)
[25]

QUESTION 4

Input (8421)				Output (XS-3)			
A	B	C	D	W	X	Y	Z
0	0	0	0	0	0	1	1
0	0	0	1	0	1	0	0
0	0	1	0	0	1	0	1
0	0	1	1	0	1	1	0
0	1	0	0	0	1	1	1
0	1	0	1	1	0	0	0
0	1	1	0	1	0	0	1
0	1	1	1	1	0	1	0
1	0	0	0	1	0	1	1
1	0	0	1	1	1	0	0
1	0	1	0	Ø	Ø	Ø	Ø
1	0	1	1	Ø	Ø	Ø	Ø
1	1	0	0	Ø	Ø	Ø	Ø
1	1	0	1	Ø	Ø	Ø	Ø
1	1	1	0	Ø	Ø	Ø	Ø
1	1	1	1	Ø	Ø	Ø	Ø
√	√	√	√	√	√	√	√

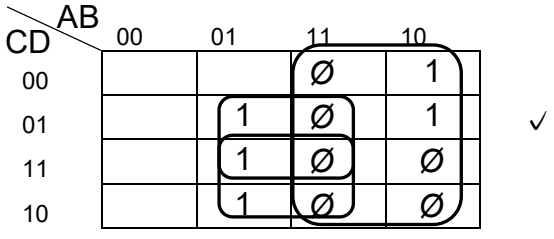

✓

W = A+BD+BC ✓

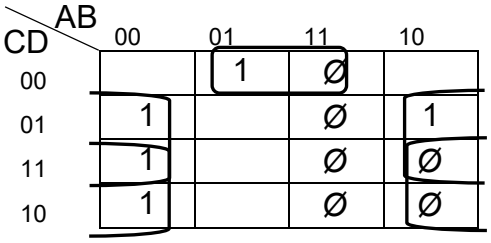

✓

$X = B\overline{C}\overline{D} + \overline{B}D + \overline{B}C$ ✓

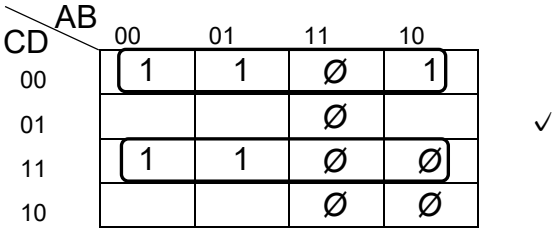

✓

$Y = \overline{C}\overline{D} + CD = \overline{C \oplus D}$ ✓

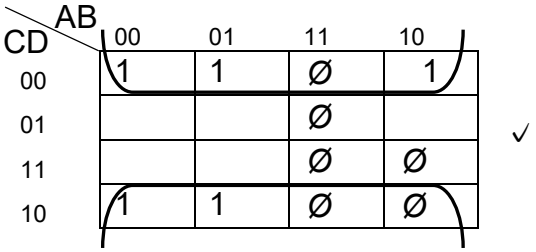

✓

$Z = \overline{D}$ ✓

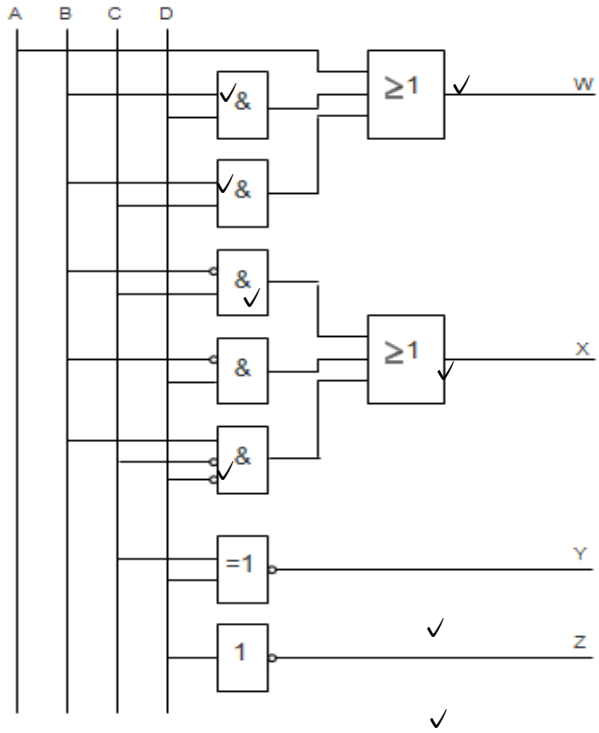

✓ ✓ ✓ ✓ ✓

[20]

QUESTION 5

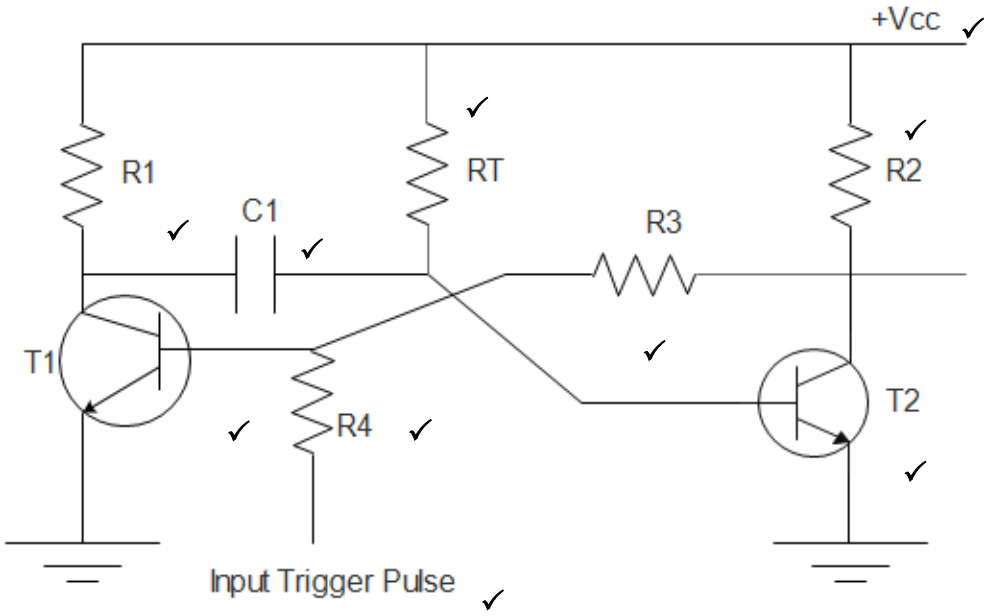

[10]

TOTAL: 100

Copyright reserved