higher education & training

Department:
Higher Education and Training
REPUBLIC OF SOUTH AFRICA

NASIENRIGLYN

NASIONALE SERTIFIKAAT

INGENIEURSWETENSKAP N4

27 November 2023

Hierdie nasienriglyn bestaan uit 15 bladsye.

Kopiereg voorbehou

VRAAG 1

1.1 $v_g = v_t - v_l$

$v_g = 19 - 1.9$ ✓

$v_g = 17,1 m/s; North$ ✓ (2)

1.2

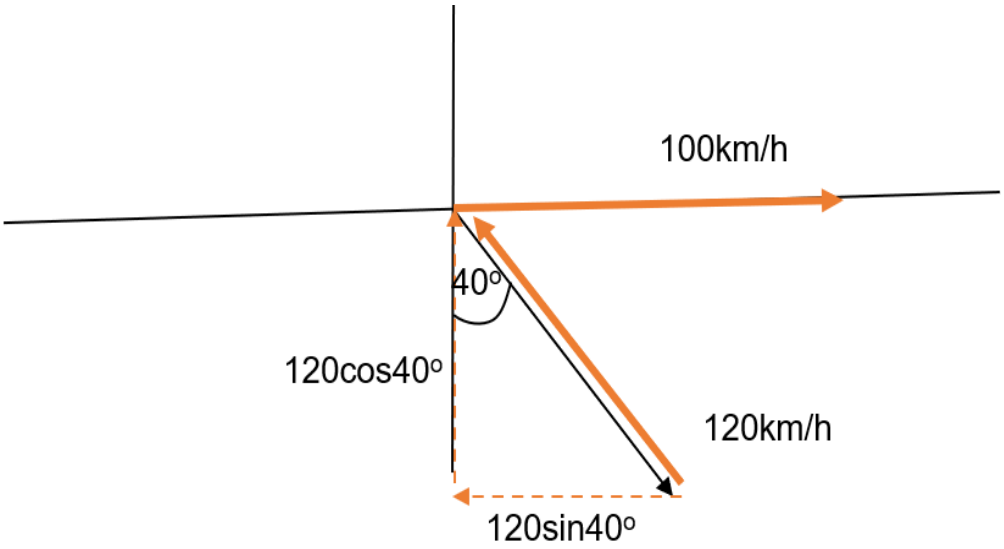

ΣVc = 120 cos40° = 91,925 km/h (N)✓
ΣHc =-120 sin40° + 100 = 22,865 km/h (O)✓✓

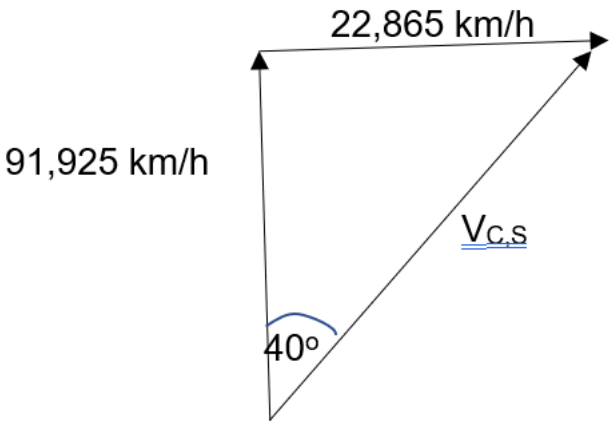

$V_{C,S} = \sqrt{91,925^2 + 22,865^2}$ = 94,726 km/h✓

Dus θ = $\tan^{-1}(\frac{22,865}{91,925})$ = 13,97° = N 13,97° O✓ (5)

1.3

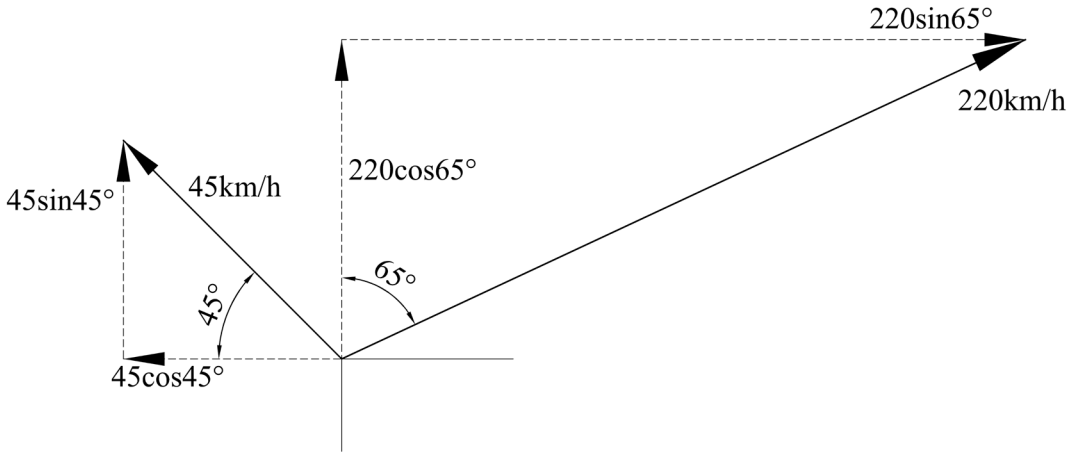

ΣVc = 45sin45° + 220cos65 = 124,796 km/h (N)✓
ΣHc =-45cos45° + 220sin65 = 167,568 km/h (O)✓

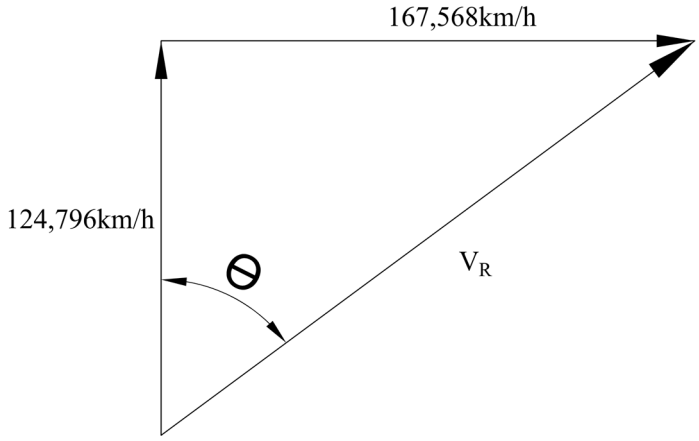

$V_R = \sqrt{167{,}568^2 + 124{,}796^2}$ ✓

$= 208{,}933$ km/h✓

$$\theta = \tan^{-1}\frac{\Sigma Hc}{\Sigma Vc}$$

$$\theta = \tan^{-1}\frac{167{,}568}{124{,}796}$$

$\underline{\theta = 53{,}232°}$ ✓ (5)

1.4 $v = u + at$

$0 = 550\sin\theta - 9{,}8\frac{35}{2}$ ✓

$\theta = \sin(\frac{9{,}8\times 35}{2\times 450})$ ✓

$\theta = 22{,}4°$ ✓ (3)

[15]

VRAAG 2

2.1 Gegee:
T_1 = 800 N
T_2 = 450 N
D = 0,07 m
N = 350 rpm

2.1.2 T = Fe × r
= (800 – 450) × 0,035✓✓
= 12,25 Nm✓ (3)

2.1.3 $P = \frac{WD}{t} = \frac{T\theta}{t} = \frac{2\ x\ \pi\ x\ N\ x\ T}{60}$

$= \frac{2\ x\ \pi\ x\ 350\ x\ 12,25}{60}$✓

= 448,986 W✓ (2)

2.2 Gegee:
N = 3 500 rpm
D = 0,08 m

2.2.1 $N = \frac{3500}{60}$
$N = 58,333r/s$ ✓

$\omega = \pi.D.N$
$\omega = \pi \times 0,08 \times 58,333$ ✓
$\omega = 14,661rad/s$ ✓

OF

$\omega = \frac{\pi.D.N}{60}$
$\omega = \frac{\pi \times 3500 \times 0,8}{60}$
$\omega = 14,661rad/s$ (3)

2.2.2 Θ = ωt = 14,661 × 15✓
= 219,915 radiale✓ (2)

2.2.3 V = ωr = 14,661 × 0,04✓
= 0,587 m/s✓ (2)
[12]

VRAAG 3

3.1 Newton se eerste wet lui dat traagheid die eienskap van 'n voorwerp is om in 'n rustoestand of egalige beweging te bly. (1)

3.2 Gegee:
u = 2 m/s
v = 10 m/s
t = 45s
Fμ = 500 N

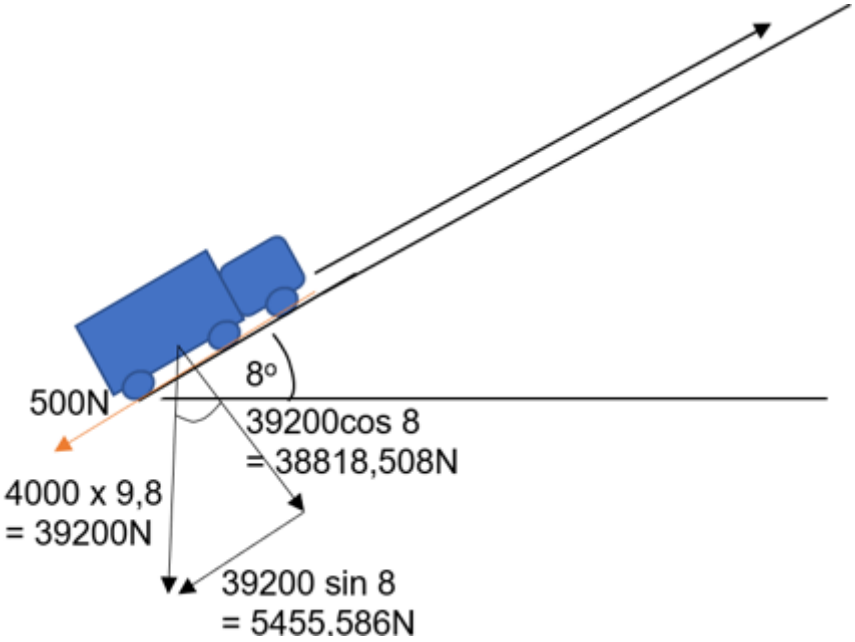

3.2.1 v = u + at
$a = \frac{10-2}{45}$ ✓
a = 0,178 m/s² ✓ (2)

3.2.2 $v^2 - s^2 = 2as$

$s = \frac{v^2 - s^2}{2a}$

$s = \frac{10^2 - 2^2}{2 \times 0,178}$ ✓

$s = 269,663m$ ✓

OF

$$s = \frac{u+v}{2} \times t$$
$$s = \frac{2+10}{2} \times 45$$
$$s = 270m$$

$$s = ut + \tfrac{1}{2}at^2$$
$$s = 2(45) + \tfrac{1}{2}(0,178)(45)^2$$
$$s = 270,225m$$ (2)

3.2.3 $$ma = 4000 \times 0,178$$
$$ma = 712N \checkmark$$

$$F_\mu = 500N$$

$$F_s = mg\sin\theta$$
$$F_s = 4000 \times 9,8 \times \sin 8°$$
$$F_s = 5455,586N \ \checkmark$$

$$ma = F - F_s - F_\mu$$
$$F = ma + F_s + F_\mu$$
$$F = 712 + 5455,586 + 500$$
$$F = 6667,568N \checkmark$$

OF

$$ma = F - F_s - F_\mu$$
$$F = ma + F_s + F_\mu$$
$$F = (4000 \times 0,178) + (4000 \times 9,8 \times \sin 8°) + 500$$
$$F = 6667,568N$$ (3)

3.2.4 $$P = \frac{F.s}{t}$$
$$P = \frac{6667,568 \times 270,225}{45} \ \checkmark$$
$$P = 40,039kW \ \checkmark$$ (2)

3.3 M = 15 kg
V = 16,4 m/s

3.3.1 $E_p = E_k = \frac{1}{2} \times m \times v^2$ ✓

$E_p = E_k = \frac{1}{2} \times 15 \times 16,4^2$

$E_p = E_k = 2017,2N$ ✓

3.3.2 $E_p = E_k = m \times g \times h$

$h = \frac{E_p}{mg}$

$h = \frac{2017,2}{15 \times 9,8}$ ✓

$h = 13,722m$ ✓

(2 × 2) (4)
[14]

VRAAG 4

4.1

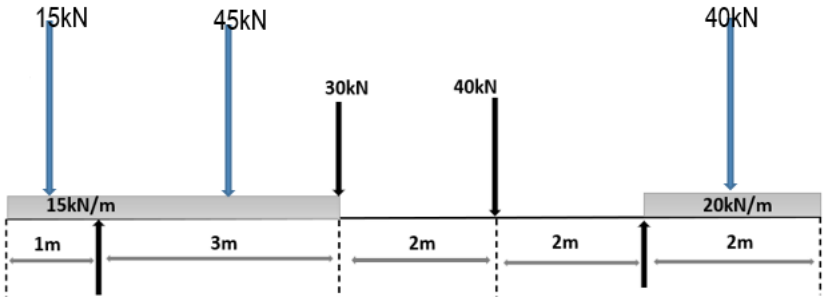

4.1.1 Neem momente om B
ΣCM = ΣACM
(45 × 1,5) + (30 × 3) + (40 × 5) + (40 × 8) = (15 × 0,5) + (E × 7)✓
Dus, E = 95,714 kN√

Neem momente om E
ΣCM = ΣACM
(B × 7) + (40 × 1) = (40 × 2) + (30 × 4) + (45 × 5,5) + (15 × 7,5)✓
Dus, B = 74,286 kN√

Kontroleer: Σ F ↑ = Σ F ↓
95,714 + 74,286 = 15 + 45 + 30 + 40 + 40
170 kN = 170 kN …… gebalanseerd (3)

4.1.2

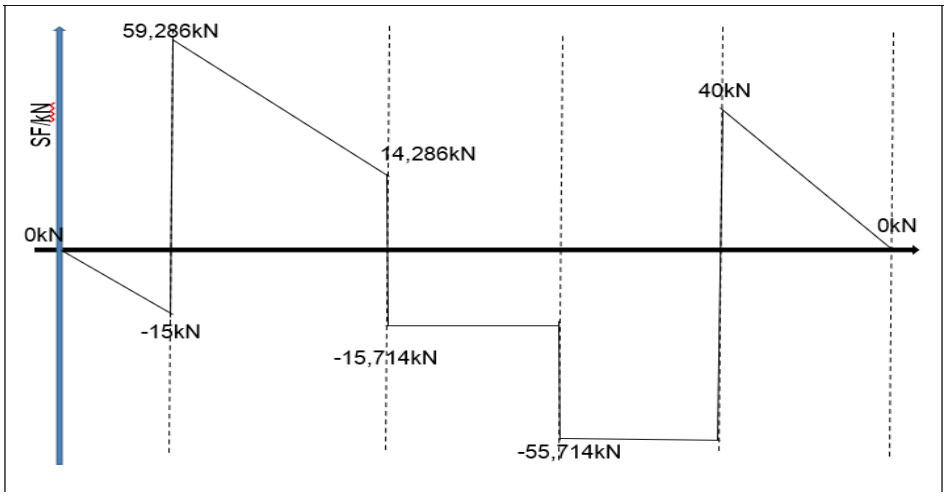

√√√√√ **vir elke korrekte waarde**
√ **vir die vorm**

(3)

4.1.3 Buigmomente by hoofpunte:

BM_A = 0 kNm √
BM_B = -(15 × 1) = -15 kNm √
BM_C = (74,286 × 3) – (15 × 3,5) – (45 × 1,5) = 102,858 kNm✓
BM_D = (95,714 × 2) – (40 × 3) = 71,428 kNm✓
BM_E = -(40 × 1) = -40 kNm√
BM_F = 0 kNm√

(4)

4.2

VORM	OPPERVLAKTE/mm	SENTROÏED/mm	GVM/mm³
	250 × 380 = 95 000√	$\frac{380}{2}$ = 190√	18 050 000√
	0,5 × 180 × 100 = 9 000√	200 + 120 = 320√	2 880 000√
	95 000 – 9 000 = 86 000√	$\bar{x}$	15 170 000√

$\dot{x} = \frac{1\ 517\ 000}{86\ 000}$ = 176,395 mm✓

(5)
[19]

VRAAG 5

5.1 Gegee:
f = 185 N
η = 0,82
MA =12
$\frac{D}{d} = \frac{8}{1}$

$$MA = \frac{f_p}{f} \times \frac{1}{\eta}$$
$$f_p = MA \times f \times \eta$$
$$f_p = 12 \times 185 \times 0,82 \checkmark$$
$$f_p = 1820,4N \checkmark$$

$$\frac{f_p}{d^2} = \frac{F}{D^2}$$
$$F = \frac{D^2}{d^2} \times f_p \checkmark$$
$$F = \frac{8^2}{1^2} \times 1820,4 \checkmark$$
$$F = 116,506kN \checkmark$$ (5)

5.2 Gegee:

Drie silinders = x 3
$d = 0,125m$
$l = 0,4m$
$\eta = 0,8$
$\rho = 500kPa$
$n = 500rpm$

$Vol / stroke$:
$$V_{stroke} = \frac{\pi D^2}{4} \times l$$
$$V_{stroke} = \frac{\pi \times 0,125^2}{4} \times 0,4$$
$$V_{stroke} = 0,00491m^3 \checkmark$$

$$n = \frac{500}{60}$$
$$n = 8,333r/s \checkmark$$

Vol/s drie suiers:

$$Vol/\sec(3) = V_{stroke} \times n \times 3$$
$$Vol/\sec(3) = 0,00491 \times 8,333 \times 3$$
$$Vol/\sec(3) = 0,123 m^3/s \checkmark$$

$$P_{in} = \frac{P_{out}}{\eta}$$
$$P_{in} = \frac{\rho \times \frac{V}{s}}{\eta}$$
$$P_{in} = \frac{500 \times 10^3 \times 0,123}{0,8} \checkmark$$
$$P_{in} = 76,875 kPa$$

OF

$$P_{in} = \frac{P_{out}}{\eta}$$
$$P_{in} = \frac{\rho \times V}{\eta \times t}$$
$$P_{in} = \frac{\rho \times 3(\frac{\pi . D^2}{4} \times l \times n)}{\eta}$$
$$P_{in} = \frac{500 \times 10^3 \times 3(\frac{\pi \times 0,125^2}{4} \times 0,4 \times \frac{500}{60})}{0,8}$$
$$P_{in} = 76,696 kPa$$

(4)

5.3 D = 200 mm
m = 900 kg
l = 2 200 mm

5.3.1
$$F = mg$$
$$F = 900 \times 9,8$$
$$F = 8820 N \checkmark$$

$$A = \frac{\pi D^2}{4}$$
$$A = \frac{\pi 0,2^2}{4}$$
$$A = 0,0314 m^3 \checkmark$$

$$\rho = \frac{F}{A}$$
$$\rho = \frac{8820}{0,0314}$$
$$\rho = 280,892kPa \checkmark$$ (3)

OF

$$\rho = \frac{F}{A}$$
$$\rho = \frac{mg}{\frac{\pi.D^2}{4}}$$
$$\rho = \frac{900 \times 9,8}{\frac{\pi \times 0,2^2}{4}}$$
$$\rho = 280,749kPa$$

5.3.2
$$V = A \times l$$
$$V = \frac{\pi.D^2}{4} \times l$$
$$V = \frac{\pi.0,2^2}{4} \times 2.2 \checkmark$$
$$V = 0,069115 \times 1000 \checkmark$$
$$V = 69,115\ell \checkmark$$ (3)
[15]

VRAAG 6

6.1 Gegee:
$\sigma = 65MPa$
$l = 1,9m$
$D = 60mm$
$d = 52mm$
$E = 210GPa$

6.1.1
$$\sigma = \frac{F}{A}$$
$$F = 4 \times \sigma \times A$$
$$F = 4 \times 65 \times 10^6 \times \left(\frac{\pi.0,06^2}{4} - \frac{\pi.0,052^2}{4}\right) \checkmark$$
$$F = 182966,356N \checkmark$$
$$m = \frac{F}{g}$$
$$m = \frac{182966,356}{9,8}$$
$$m = 18670,036kg$$
$$m = 18,67ton \checkmark$$ (3)

6.1.2 $\varepsilon = \frac{\Delta x}{l}$

$\Delta x = \varepsilon \times l$

$E = \frac{\sigma}{\varepsilon}$

$\varepsilon = \frac{\sigma}{E}$

$\Delta x = \frac{\sigma}{E} \times l$

$\Delta x = \frac{65\times10^6}{210\times10^9} \times 1,9$ ✓

$\Delta x = 0,000588m$ ✓

$\Delta x = 0,588mm$ ✓

OF

$E = \frac{\sigma}{\varepsilon}$

$E = \frac{\frac{F}{A}}{\frac{\Delta x}{l}}$

$\Delta x = \frac{F}{A} \times \frac{l}{E}$

$\Delta x = \frac{\frac{182966,356}{4} \times 1,9}{\left(\frac{\pi.0,06^2}{4} - \frac{\pi.0,052^2}{4}\right) \times 210\times10^9}$

$\Delta x = 0,000588m$

$\Delta x = 0,588mm$ (3)

6.2 6.2.1

$\sigma = \frac{F}{A}$ $\sigma = \frac{10\times10^3}{\frac{\pi 0,02^2}{4}}$ $\sigma = 31,831MPa$	$\varepsilon = \frac{\Delta x}{l}$ $\varepsilon = \frac{15\times10^{-6}}{0,2}$ $\varepsilon = 0,75\times10^{-4}$	✓
$\sigma = \frac{F}{A}$ $\sigma = \frac{30\times10^3}{\frac{\pi 0,02^2}{4}}$ $\sigma = 95,943MPa$	$\varepsilon = \frac{\Delta x}{l}$ $\varepsilon = \frac{67,5\times10^{-6}}{0,2}$ $\varepsilon = 3,375\times10^{-4}$	✓
$\sigma = \frac{F}{A}$ $\sigma = \frac{50\times10^3}{\frac{\pi 0,02^2}{4}}$ $\sigma = 159,155MPa$	$\varepsilon = \frac{\Delta x}{l}$ $\varepsilon = \frac{125\times10^{-6}}{0,2}$ $\varepsilon = 6,25\times10^{-4}$	✓
$\sigma = \frac{F}{A}$ $\sigma = \frac{70\times10^3}{\frac{\pi 0,02^2}{4}}$ $\sigma = 222,817MPa$	$\varepsilon = \frac{\Delta x}{l}$ $\varepsilon = \frac{183\times10^{-6}}{0,2}$ $\varepsilon = 9,15\times10^{-4}$	✓
$\sigma = \frac{F}{A}$ $\sigma = \frac{90\times10^3}{\frac{\pi 0,02^2}{4}}$ $\sigma = 286,479MPa$	$\varepsilon = \frac{\Delta x}{l}$ $\varepsilon = \frac{237\times10^{-6}}{0,2}$ $\varepsilon = 11,85\times10^{-4}$	✓

$\sigma = \frac{F}{A}$	$\varepsilon = \frac{\Delta x}{l}$
$\sigma = \frac{110\times10^3}{\frac{\pi 0{,}02^2}{4}}$	$\varepsilon = \frac{292\times10^{-6}}{0{,}2}$
$\sigma = 350{,}141MPa$	$\varepsilon = 14{,}6\times10^{-4}$

✓

(6)

6.2.2

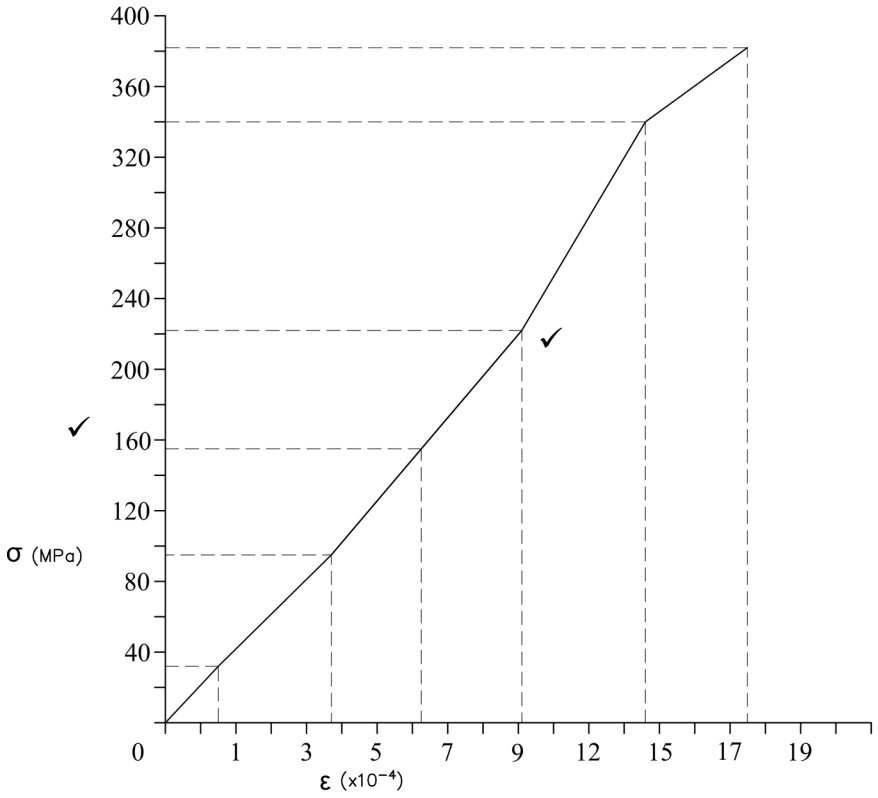

✓ ✓

(2)
[14]

VRAAG 7

7.1 Gegee:

$L_O = 2m$

$L_F = 2032{,}5mm$

$\Delta t = 300K$

7.1.1 $\Delta l = L_O \times \alpha \times \Delta t$

$\alpha = \frac{\Delta l}{L_O \times \Delta t}$

$\alpha = \frac{2{,}0325 - 2}{2\times300}$ ✓

$\alpha = 54{,}167\times10^{-6} / K$ ✓ (2)

7.1.2 Lood (1)

7.2 $\Delta V_P = \gamma_P \times V_P \times \Delta t$

$\Delta V_P = 76,4 \times 10^{-5} \times 45 \times (45 - 21)$ ✓

$\Delta V_P = 0,825 cm^3$ ✓

$\Delta V_G = \gamma_G \times V_G \times \Delta t$

$\Delta V_G = 3(8,6 \times 10^{-6}) \times 45 \times (45 - 21)$ ✓

$\Delta V_G = 0,0279 cm^3$ ✓

$V_{Overflow} = \Delta V_P - \Delta V_G$

$V_{Overflow} = 0,825 - 0,0279$ ✓

$V_{Overflow} = 0,7971 cm^3$ ✓ (6)

7.3 Gegee:

$V_1 = 80 \times 10^{-6} m^3$

$P_1 = 250 kPa$

$P_2 = 400 kPa$

$P_1.V_1 = P_2.V_2$

$V_2 = \frac{P_1.V_1}{P_2}$ ✓

$V_2 = \frac{(250 \times 10^3) \times (80 \times 10^{-6})}{400 \times 10^3}$ ✓

$V_2 = 50 \times 10^{-6} m^3$ ✓ (3)

7.4 Gegee:

$T_O = 278K$

$T_F = 302K$

$P_O = 490 kPa$

$P_F = 101,3 kPa$

$V_O = 0,5 m^3$

$$\frac{P_O.V_O}{T_O} = \frac{P_F.V_F}{T_F}$$

$$V_F = \frac{P_O.V_O.T_F}{T_O.P_F} \checkmark$$

$$V_F = \frac{(490 \times 10^3) \times 0,5 \times 302}{278 \times (101,3 \times 10^3)} \checkmark$$

$$V_F = 2,627 m^3 \quad \checkmark$$

(3)
[15]

TOTAAL: 100

Kopiereg voorbehou