higher education & training

Department:
Higher Education and Training
REPUBLIC OF SOUTH AFRICA

NATIONAL CERTIFICATE

FAULT FINDING AND PROTECTIVE DEVICES N4

(8080104)

25 November 2022 (X-paper)
09:00–12:00

Drawing instruments may be used.

This question paper consists of 4 pages and 1 diagram sheet.

249Q1E2225

Copyright reserved

DEPARTMENT OF HIGHER EDUCATION AND TRAINING
REPUBLIC OF SOUTH AFRICA

NATIONAL CERTIFICATE
FAULT FINDING AND PROTECTIVE DEVICES N4
TIME: 3 HOURS
MARKS: 100

INSTRUCTIONS AND INFORMATION

1. Answer all the questions.
2. Read all the questions carefully.
3. Number the answers according to the numbering system used in this question paper.
4. Use only a blue or black pen.
5. All drawings and graphs should be clear and neat and may be done in pencil.
6. Write neatly and legibly.

Copyright reserved

QUESTION 1

1.1 Why was the nine-point plan designed? (2)

1.2 State the THREE best actions to be taken when considering implementing new decisions. (Any 3 × 2) (6)

1.3 Name TWO rules that a person should know if he/she wants to become more effective in fault-finding techniques. (2)

1.4 Explain the term *preventative maintenance.* (4)

[14]

QUESTION 2

2.1 Draw a three-phase star/delta automatic control circuit. (8)

2.2 Give TWO reasons why a moving-coil instrument can be used in a DC supply but not in an AC supply. (2 × 2) (4)

2.3 Answer the following with reference to fault-finding techniques:

2.3.1 Name FIVE aids concerning the documentation of fault finding. (5)

2.3.2 Name FOUR methods used in the systematic method of fault finding. (4)

2.4 Draw up an action/reaction table of the circuit on the DIAGRAM SHEET (attached). (8)

[29]

QUESTION 3

3.1 A technician is concerned with detecting a fault and repairing the fault.

State the NINE basic rules which the technician must apply to be more effective in finding and repairing the fault. (9)

3.2 Draw TWO circuit diagrams showing the current methods of connecting an ammeter measuring instrument in the one circuit and a voltmeter measuring instrument in the other circuit. (2 × 2) (4)

3.3 Explain how to test a diode to determine if it is faulty or not. (4)

3.4 Explain what the *capacity of a conductor* means. (3)

3.5 Draw a graph to show what happens to the dielectric strength of polythene when the thickness of the insulating material is increased. (4)

[24]

Copyright reserved

QUESTION 4

4.1 Explain *forced commutation* of SCRs. (2)

4.2 What is the purpose of air gaps in steel cores? (2)

4.3 Define the unit *ohm*. (3)

4.4 State ONE function of the time-base generator of the oscilloscope. (2)

4.5 Explain how eddy currents can be minimised in coils of transformers. (3)

[12]

QUSTION 5

5.1 Give TWO applications of a silicon control rectifier. (2)

5.2 Draw a diode to show the method that is used to compensate for the Zener diode temperature coefficient effect during manufacturing. (3)

5.3 Name the type of amplification obtained in each of the following amplifying circuits:

5.3.1 Common-emitter circuit

5.3.2 Common-collector circuit

5.3.3 Common-base circuit

(3 × 1) (3)

[8]

QUESTION 6

6.1 Draw the symbol of an AND gate with TWO inputs. (2)

6.2 Complete the following laws and identities of Boolean algebra:

6.2.1 A + AB =

6.2.2 A + AB =

6.2.3 A (A + B) =

(3 × 2) (6)

6.3 Design a logic circuit to fit the expression:

$Q = (A + \overline{C})\ (\overline{B} + C)\ (A + \overline{B})$ (5)

[13]

TOTAL: 100

Copyright reserved

(8080104)

DIAGRAM SHEET

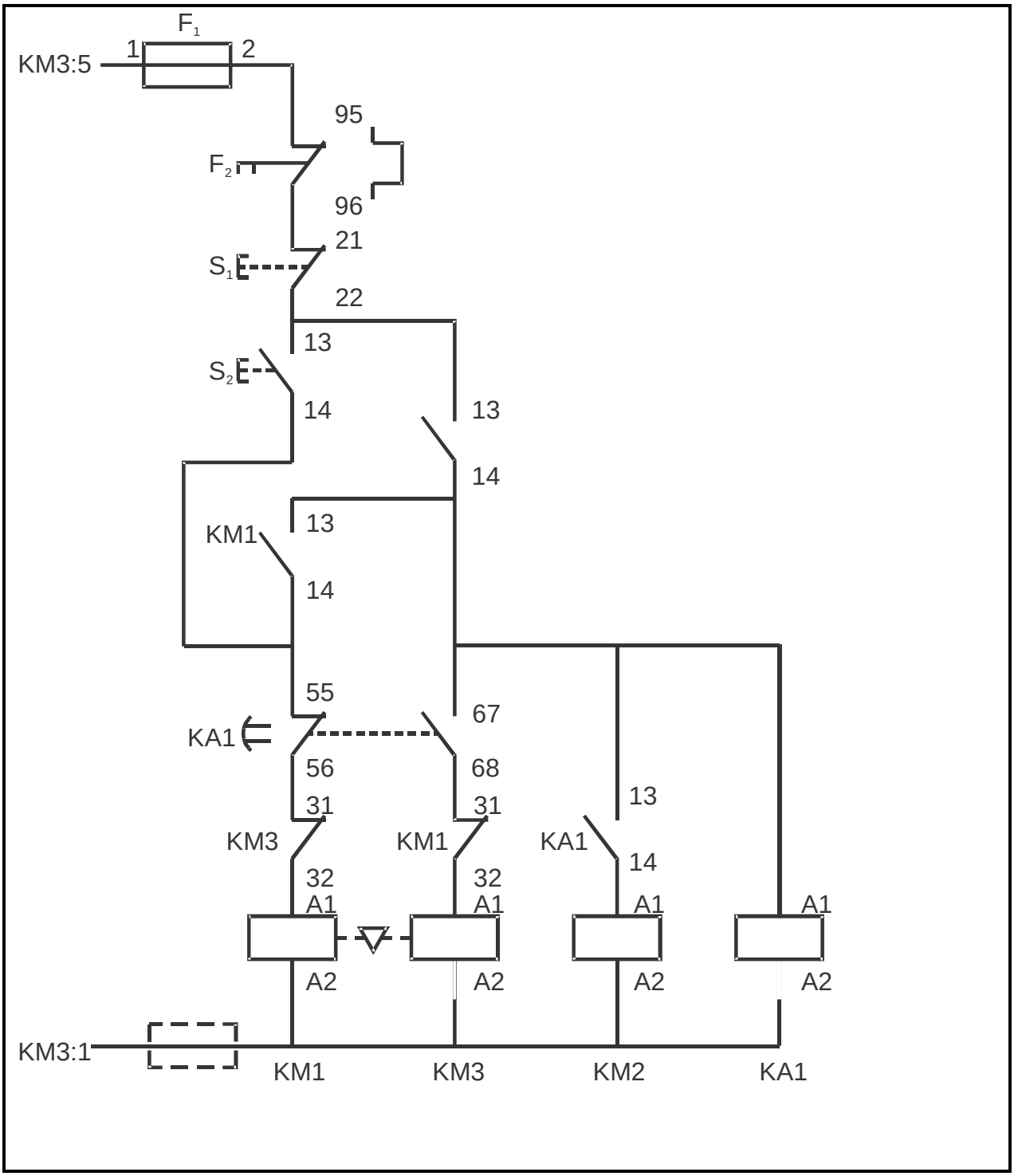

Copyright reserved