higher education & training

Department:
Higher Education and Training
REPUBLIC OF SOUTH AFRICA

MARKING GUIDELINE

NATIONAL CERTIFICATE

FAULT FINDING AND PROTECTIVE DEVICES N4

25 November 2022

This marking guideline consists of 6 pages.

Copyright reserved

QUESTION 1

1.1 The nine-point plan was designed for making sound decisions which can be implemented for fault finding or solving any other problem in the work situation. (2)

1.2
- Test your planned actions in terms of the existing practice.
- It is important to give very good consideration to new methods of repairs which are directly in contrast with existing practices, before deciding on implementing them.
- Thought must be given to the individual, the group and the production and how your actions will influence them.
- Will the objective be reached?
- Would the results you hope to obtain with the new methods correspond with the objective? (Any 3 × 2) (6)

1.3
- There are basic rules that must be complied with.
- Different fault location methods should be known. (2)

1.4
- It is the service done on a machine
- to check if all different components are in a good working condition.
- Damaged, torn and worn-out components should be replaced.
- This service is done when a plant is shut down. (4)

[14]

QUESTION 2

2.1

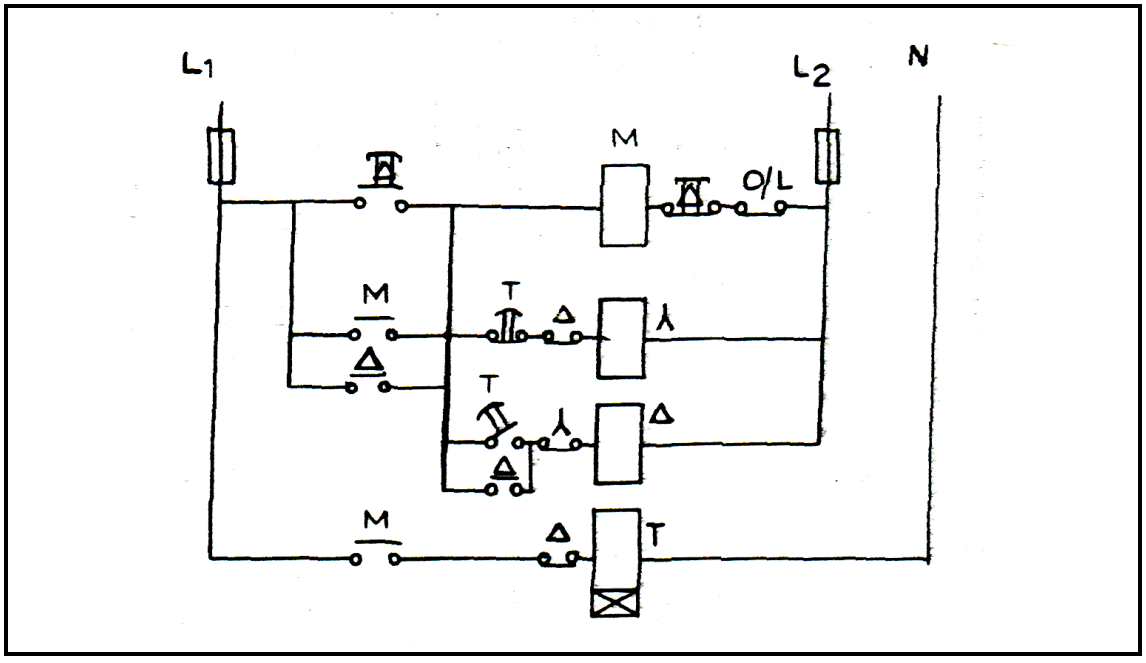

(8)

2.2
- In DC the polarity of the coil does not change, therefore the magnetic field of the horseshoe magnet and of the coils remain the same.
- In AC the polarity of the coil will change continuously and the needle will move in both directions. (2 × 2) (4)

2.3 2.3.1

- The functional block diagram
- Test data charts
- Layout diagram
- Test flow charts
- Symptom analysis charts (5)

2.3.2

- Input and output
- Physical structures
- Block diagram
- Reliability data test
- Half-split (Any 4 × 1) (4)

2.4

	ACTION	REACTION
1.	Manually close Q1	None
2.	Push the start button S2	• Energise KM1 • Closing main contacts KM1 – star connection • Closing contacts (13-14) KM1 • Energise KM2 through KM1 (13-14) and supply of overload relay F3 • Line connection through KM2 • Hold in KM2 by (13-14) KM2 • De-energise KM1 by KM2 (55-56) • Opening star connection KM1 star connection • Energise KM3 by KM1 (31-32) • Closing main contacts KM3 – Delta connection with resistance • Energise KM11 by KM3 (67-68) • Closing main contacts KM11 – Opening resistance • Opening of supply to F3 by KM11 (31-32)
3.	Push stop button S1	Control circuit off, KM2, KM3, KM11 de-energised

(8)
[29]

QUERY: F3 and KM11 not indicated on circuit on DIAGRAM SHEET attached to the Question Paper.

QUESTION 3

3.1
- Understand how the basic components operate.
- Know how the typical circuit operates.
- Know how to break the circuit.
- Know how to read schematic electrical diagrams.
- Have a logical and orderly approach to finding the fault.
- Record all the results of the findings.
- Never twiddle pots indiscriminately or change more than one thing in a time.
- It is important to know the difference between the control and the main circuit.
- The main focus should be on the control circuit. (9)

3.2

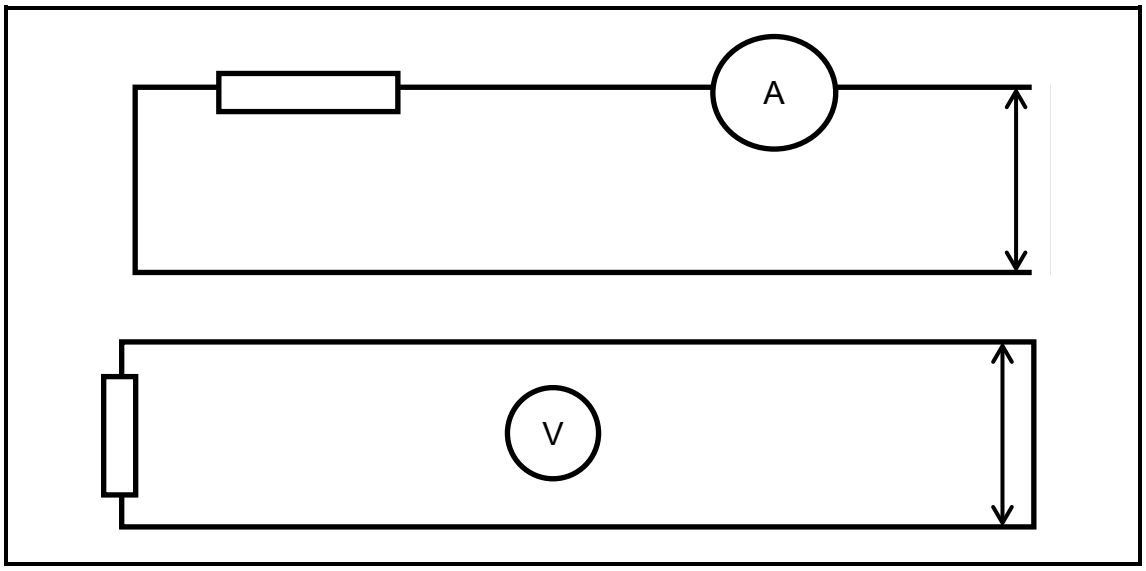

(2 × 2) (4)

3.3
- A diode has a line on one side which is the cathode or N-type doped.
- Forward resistance measurement:
  If the positive probe of an ohmmeter is connected to the anode and the negative probe to the cathode, the resistance should be low.
- When interchanging the probes, it is then reverse bias and the resistance will be high.
- If a low resistance is obtained for both situations, the diode is short-circuited. (4)

3.4
- The capacity of the conductor, that is the amount of the current it can carry,
- is related to its electrical resistance.
- A lower-resistance conductor can carry a larger value of current. (3)

3.5

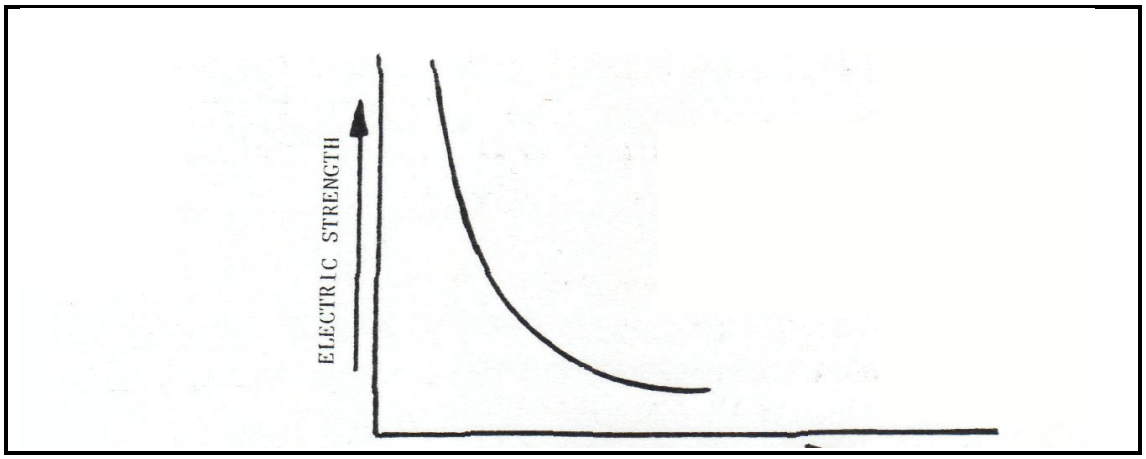

(4)
[24]

QUESTION 4

4.1 Forced commutation is the switching off of an SCR after conduction. (2)

4.2 They prevent the core from saturating and losing some of its inductance. (2)

4.3
- Ohm is the unit of resistance.
- It is that resistance which produces 1 joule energy
- when 1 ampere flows through it for 1 second. (3)

4.4
- The time-base generator of the oscilloscope is used to supply voltage to the X-plate in such a way
- that the spot is initially attracted to the left of the screen and gradually moves to the right. (2)

4.5
- Lamination of coil.
- Varnishing the conductor coil.
- Using ferrite cores as lamination. (3)

[12]

QUESTION 5

5.1
- Motor speed control
- Time-delay circuit
- Battery charger
- Heater control
- Relay circuit
- Regulate power supplies
- Static switches
- Phase controls (Any 2 × 1) (2)

5.2

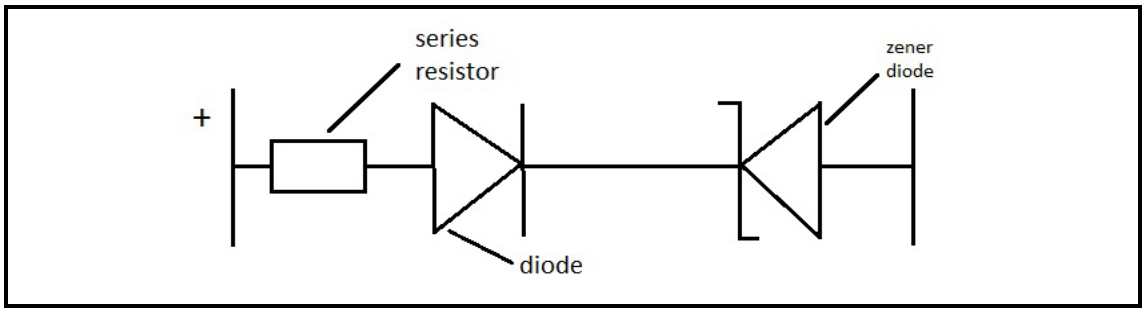

(3)

5.3 5.3.1 Voltage and current
5.3.2 Current
5.3.3 Voltage

(3 × 1) (3)
[8]

QUESTION 6

6.1

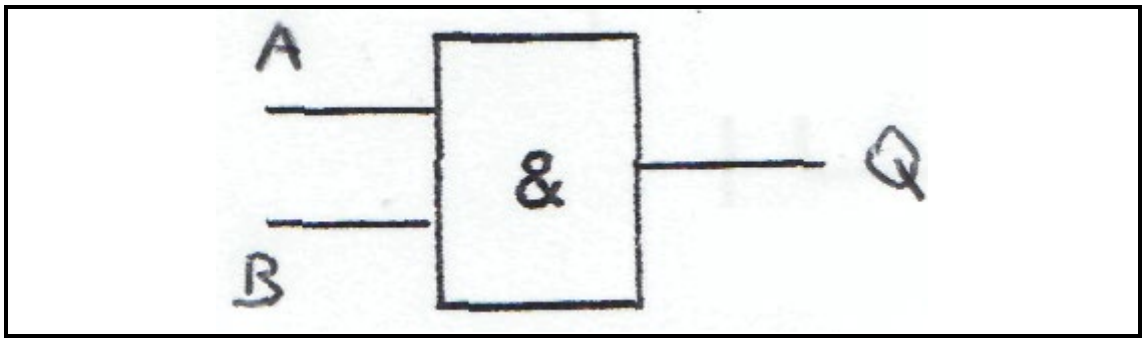

(2)

6.2 6.2.1 A + AB = 1
6.2.2 A + AB = A
6.2.3 A (A + B) = A

(Only the answer is also correct) (3 × 2) (6)

6.3

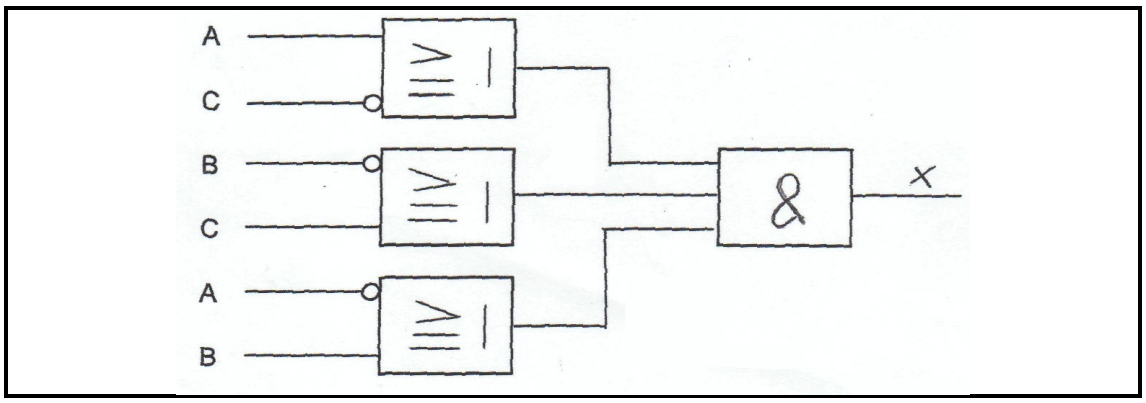

(5)
[13]

TOTAL: 100

Copyright reserved