higher education & training

Department:
Higher Education and Training
REPUBLIC OF SOUTH AFRICA

MARKING GUIDELINE

NATIONAL CERTIFICATE

DIGITAL ELECTRONICS N4

6 DECEMBER 2023

This marking guideline consists of 7 pages.

Copyright reserved

QUESTION 1

1.1 B
1.2 C
1.3 D
1.4 C
1.5 A

(5 × 1) **[5]**

QUESTION 2

2.1 16 symbols (1)

2.2 7 (1)

2.3 2.3.1 $-12,5_8$ = -001010, 101_2✓→ 2's compliments → -110101,011✓
$-12,5_{10}$ = -001100, 100_2✓→ 2's compliments → -110011,100✓

	1	*	1	1	0	1	0	1,	0	1	1	
+	1	*	1	1	0	0	1	1,	1	0	0	
1	1	*	1	0	1	0	0	0,	1	1	1	✓

-010111,000 +1 = -010111,001✓ $= -2^4 + 2^2 + 2^1 + 2^0 + 2^{-3}$
$= -16 + 4 + 2 + 1 + 0,125$
$= -23,125_{10}$✓ (7)

2.3.2 $A,C_{16} = 1010,1100_2$✓
$3,5_8 = 011,101_2$✓

					1	0	1	0	,1	1	0	
					x		1	1	,1	0	1	
					1	0	1	0	1	1	0	✓
			1	0	1	0	1	1	0			
		1	0	1	0	1	1	0				✓
	1	0	1	0	1	1	0					
1	0	0	1	1	0	1	1	1	1	1	0	✓

∴ $100110,111110_2$ = 100 110, 111 110 = $43,56_8$✓ (6)

Copyright reserved

2.3.3 $26,F8_{16} = 100110,111110_2$ ✓
$10,75_{10} = 1010,11_2$ ✓

```
                                  1 1 ,1 0 1 ↓ ✓
1 0 1 0 1 1 | 1 0 0 1 1 0 1 1 ,1 1 1 0
              1 0 1 0 1 1 ↓ ↓ ✓
              1 0 0 0 1 0 1 ↓
                1 0 1 0 1 1 ↓
                0 1 1 0 1 0 1 ✓
                  1 0 1 0 1 1 ↓ ↓
                  0 0 1 0 1 0 1 1 ✓
                      1 0 1 0 1 1
                                0
```

$\therefore 11,101_2 = 3,A_{16}$ ✓ (7)

2.4 2.4.1 $0100\ 1101,1011_{2421}$ (3)
2.4.2 $0111\ 1010,1000_{X3BCD}$ (3)
[28]

QUESTION 3

3.1 $2^4 = 16$ (1)

3.2

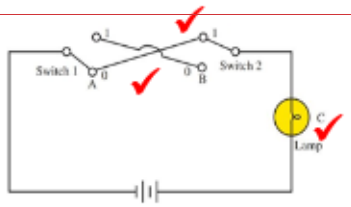

(3)

3.3 3.3.1 $ABC + AB\overline{C} + ABC + \overline{A}B = F$

$F = \overline{A}B(C+1) + AB(C+\overline{C})$ ✓

$= \overline{A}B + AB$ ✓

$= B(\overline{A} + A)$ ✓

$= B$ ✓ (4)

Commented [L1]: Please make all ticks black.

3.3.2 $AB \oplus B = F$

$let\ AB = K$ ✓
$\therefore F = K \oplus B$✓
$= K\bar{B} + \bar{K}B$
$= AB.\bar{B} + \overline{AB}.B$✓
$= 0 + B(\bar{A} + \bar{B})$
$= \bar{A}B + B\bar{B}$✓
$= \bar{A}B + 0$
$= \bar{A}B$✓

OR

$AB \oplus B = F$

$F = AB.\bar{B} + \overline{AB}.B$✓
$= 0 + B(\bar{A} + \bar{B})\bar{B}$✓
$= \bar{A}B + B\bar{B}$✓
$= \bar{A}B + 0\bar{B}$✓
$= \bar{A}B$✓

(5)

3.3.3 $A\bar{B}\bar{C} + A\bar{B}C + \bar{A}B\bar{C} + \bar{A}\bar{B}C = F$

$F = A(B\bar{C} + \bar{B}C) + \bar{A}(B\bar{C} + \bar{B}C)$✓
$= A(B \oplus C) + \bar{A}(B \oplus C)$ ✓
$et\ (B \oplus C) = K$ ✓
$Then\ F = AK + \bar{A}K$
$= K(A + \bar{A})$✓
$= K(1)$
$= B \oplus C$✓

(5)

3.4 3.4.1

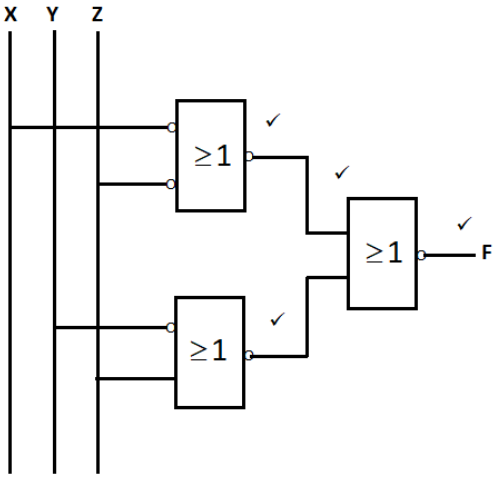

(4)

3.4.2

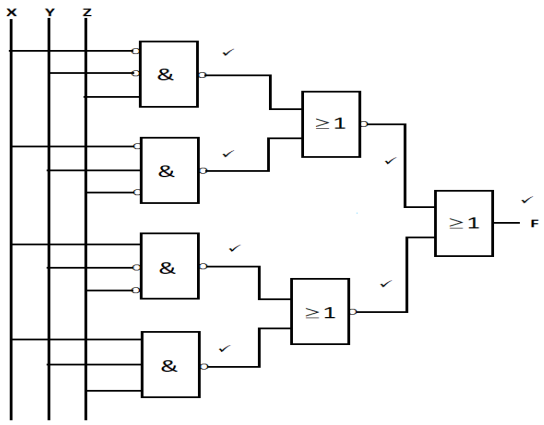

(7)
[29]

QUESTION 4

4.1 A synchronous counter is one in which all flip-flops✓ in the counter are clocked at the same time by a common clock pulse,✓ while an asynchronous counter is one in which the flip-flops within the counter do not change states at exactly the same time✓ because they do not have a common clock pulse.✓ (4)

4.2

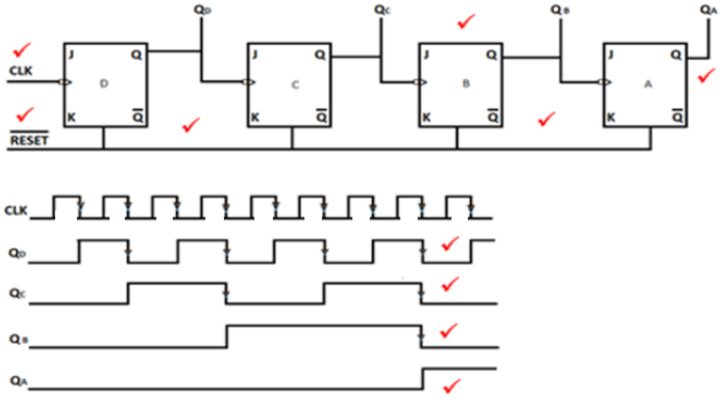

(10)

4.3

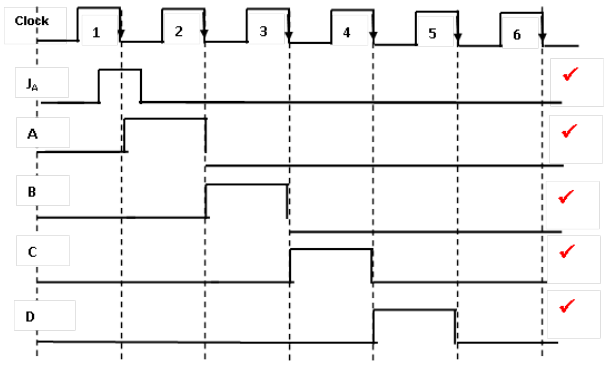

(5)
[19]

QUESTION 5

5.1

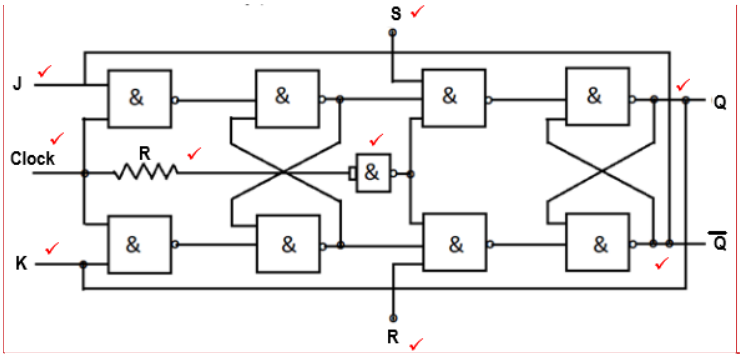

(8)

Commented [L2]: Please remove one tick. There should be only eight.

5.2

- When the clock pulse goes to 1, the slave is isolated; J and K inputs may affect the state of the system.✓ The slave flip-flop is isolated until the cock pulse goes to 0.✓ When the cock pulse goes back to 0, information is passed from the master flip-flop to the slave and output is obtained.✓
- Firstly, the master flip-flop is positive level triggered and the slave flip-flop is negative level triggered, so the master responds before the slave.✓
- If J = 0 and K = 1, the high Q output of the master goes to the K input of the slave and the clock forces the slave to reset, therefore the slave copies the master.✓
- If J = 1 and K = 0, the high Q output of the master goes to the J input of the slave and the negative transition of the clock sets the slave, copying the master.✓
- If J = 1 and K = 1, it toggles on the positive transition of the clock and therefore the slave toggles on the negative transition of the clock.✓
- If J = 0 and K = 0, the flip-flop is disabled and Q remains unchanged.✓ (8)

5.3

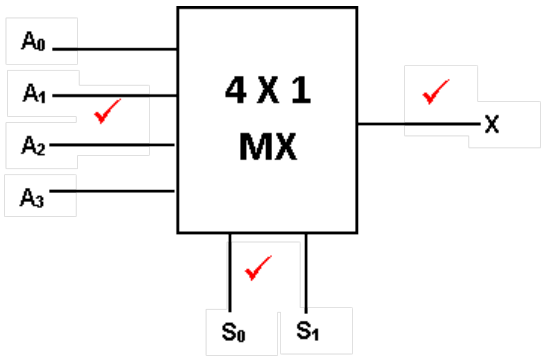

(3)
[19]

TOTAL: 100

Copyright reserved