higher education & training

Department:
Higher Education and Training
REPUBLIC OF SOUTH AFRICA

MARKING GUIDELINE

NATIONAL CERTIFICATE

COMMUNICATION-ELECTRONICS N4

15 November 2022

This marking guideline consists of 7 pages.

Copyright reserved

QUESTION 1

1.1 True
1.2 False
1.3 True
1.4 True
1.5 False
1.6 False
1.7 False
1.8 True
1.9 True
1.10 True

(10 × 1) **[10]**

QUESTION 2

2.1 2.1.1 Thevenin's theorem: In a linear circuit containing independent sources and dependent sources, elements can be replaced by a model containing a voltage source marked as Thevenin's voltage and an equivalent resistance marked as Thevenin's resistance.

OR

Thevenin's theorem: A two-terminal network of impedances and generators may be replaced by a single equivalent voltage generator and a series impedance.

2.1.2 Norton's theorem: A linear circuit containing independent sources, dependent sources. Passive elements can be replaced by a model containing a current source and an equivalent resistance.

OR

Norton's theorem: A two-terminal network of generators and impedances may be replaced by a single constant-current generator with an impedance across it.

(2 × 2) (4)

2.2 Replace 20 V battery with a short circuit.

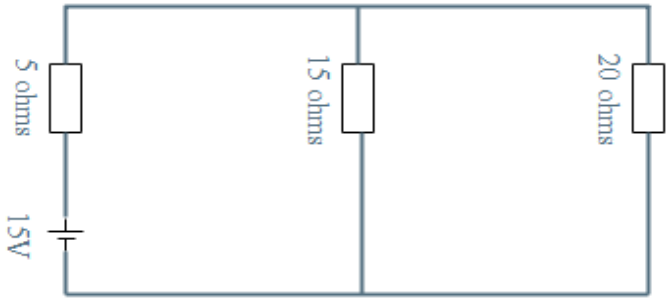

(Load on 15 V)

$$\text{Rt} = 5 + \frac{15 \times 20}{15 + 20} = 13{,}571\ \Omega$$✓

Current for 15 V

$$\text{It} = \frac{15}{13{,}571} = 1{,}11\ \text{A}$$✓

$$\text{Current through } 15\ \Omega = \frac{\text{It} \times \text{R20}}{\text{R15} + \text{R20}} = \frac{1{,}11 \times 20}{15 + 20} = 0{,}634\ \text{A}$$✓

Replace 20 V battery and short circuit 15 V battery.

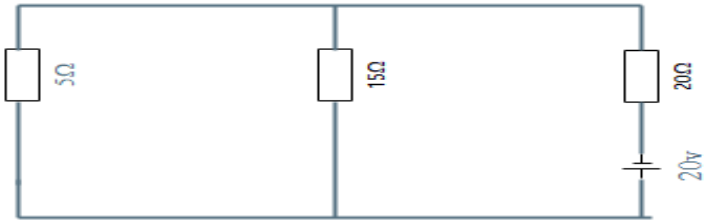

Load on 20 V

$$\text{Rt} = 20 + \frac{5 \times 15}{5 + 15} = 23{,}75\ \Omega$$✓

Current for 20 V

$$\text{It} = \frac{20}{23{,}75} = 0{,}84\ \text{A}$$✓

$$\text{Current through } 15\ \Omega = \frac{\text{It} \times 5}{5 + 15} = \frac{0{,}84 \times 5}{5 + 15} = 0{,}21\ \text{A}$$✓

Total current through 15 Ω = 0,21 + 0,636 = 0,846 A✓✓

(8)
[12]

QUESTION 3

3.1
- The inductive reactance will be equal to the capacitive reactance.
- The circuit impedance will be minimum.
- The circuit current will be maximum.
- VL = VC
- The angle θ will be zero. (Any 3 × 1) (3)

3.2 3.2.1
$$Fr = \frac{1}{2\pi\sqrt{LC}} = \frac{1}{2\pi\sqrt{100 \times 10^{-6} \times 60 \times 10^{-6}}} \checkmark$$

= 2 054,68 Hz
= 2,055 KHz✓ (2)

3.2.2 At resonance Z = R (resonance) = 8 Ω (1)

3.2.3
$$BW = \frac{R}{2\pi L} = \frac{8}{2\pi \times 100 \times 10^{-6}} = 12{,}732 \text{ KHz} \checkmark\checkmark$$ (2)

3.2.4
$$Q = \frac{XL}{R} = \frac{2\pi \times 2{,}055 \times 10^{3} \times 100^{-6}}{8} \checkmark$$
=0,161✓

$$Q = \frac{1}{R}\sqrt{\frac{L}{C}} = \frac{1}{8}\sqrt{\frac{100 \times 10^{-6}}{60 \times 10^{-6}}} \checkmark = 0{,}161\checkmark$$

$$Q = \frac{Fr}{\text{Bandwidth}} = \frac{2{,}055 \times 10^{3}}{12732{,}395} \checkmark = 0{,}161\checkmark$$

NB: Final answers to be marked only if the two are the same.
(3 × 2) (6)
[14]

QUESTION 4

4.1 A filter is a network that has low attenuation in a certain band of frequencies and a high attenuation at all other frequencies. (2)

4.2

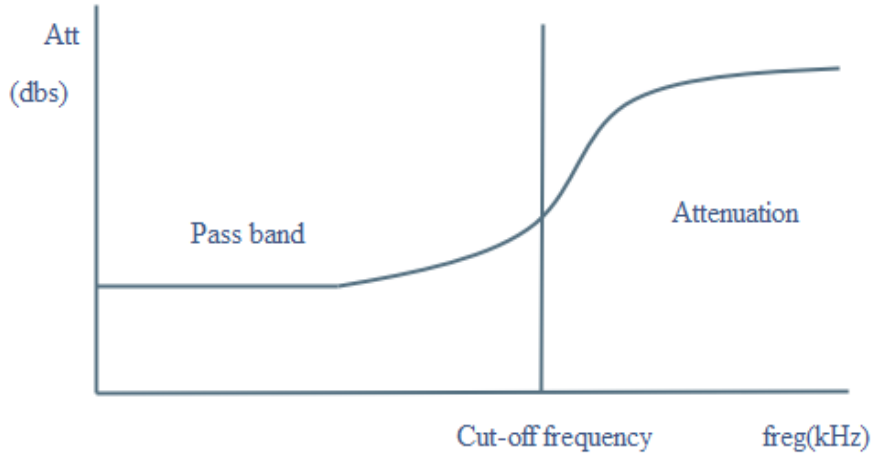

(4)

4.3 Attenuators are resistive networks designed to reduce voltage, current or power in controllable and known amounts that are independent of frequency. (2)

4.4

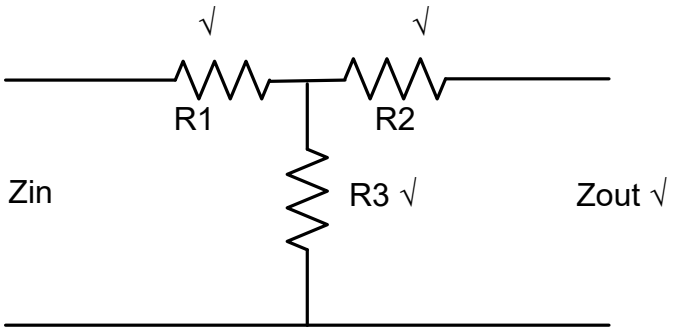

(4)
[12]

QUESTION 5

5.1 Phase modulation is a process whereby the phase of the carrier wave is made to vary in accordance with the instantaneous value of the modulating signal. (3)

5.2
- It overcomes the interference of static.
- Its transmission can take place any time of the day or night. (2 × 2) (4)

5.3
- There is a saving in bandwidth because only one sideband is transmitted.
- It is economical because there is a considerable saving of power.
- Only a restricted number of receivers are involved, so more expensive and sophisticated single-sideband equipment may be used. (3 × 2) (6)

[13]

QUESTION 6

6.1 Demodulation is the act of returning modulated data signals to their original form. (2)

6.2 To eliminate the variation in the amplitude of an input signal that may lead to distortion and perform the function of an amplitude limiter. (2)

6.3

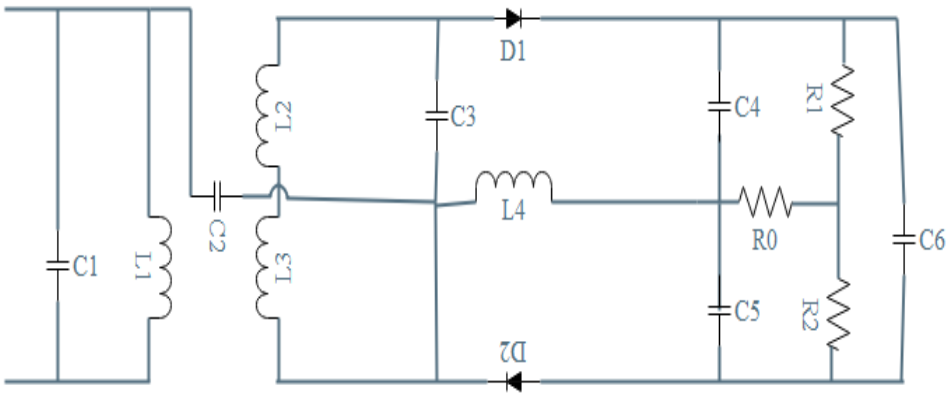

(5)
[9]

QUESTION 7

7.1

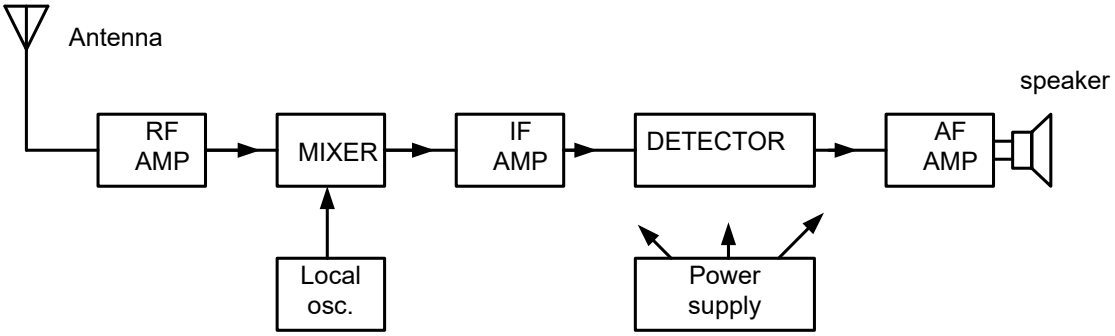

½ x 8 √ for each block and 1√ for correctness

(5)

7.2
- Antenna: It converts electromagnetic waves into electrical RF currents.
- RF amplifier: It provides selectivity to the receiver.
- Oscillator: It changes the frequency of a signal.
- Mixer: It combines the incoming RF signals with the frequency of the local oscillator and mixes the two frequencies to produce a third frequency (IF).
- IF amplifier: It provides the main amplification to the receiver and gives a high degree of stability to the IF signal.
- Discriminator: It converts frequency variations into audio signals for amplification.
- RF amplifier: It amplifies the audio signal.
- Speaker: It converts electrical audio frequency signals into mechanical sound waves. (Any 5 × 2) (10)

7.3

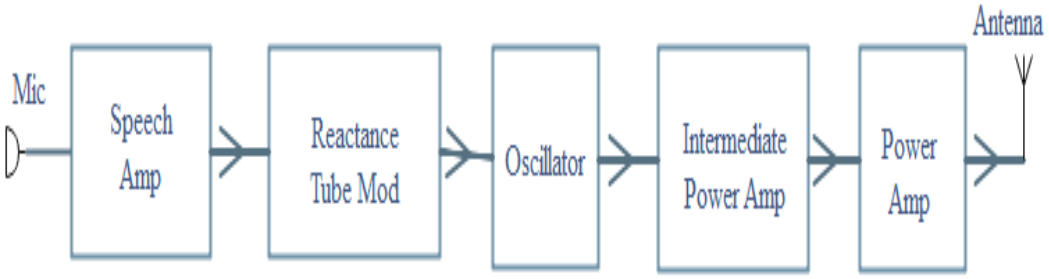

(1 mark for each labelled block, except Mic and Antenna) (5)
[20]

QUESTION 8

8.1 Part of the energy that travels along the earth when a radiated wave leaves the aerial

8.2 A wave that will strike the ground between the transmitter and the horizontal

8.3 A wave that leaves the aerial at an angle greater than that between the aerial and the horizon

8.4 The angle between the line of the reflected wave by the ionosphere and the surface of the earth at the receiver

8.5 An angle between a ray that is bent or refracted at the plane between two different media and the norm to that plane

(5 × 2) **[10]**

TOTAL: 100

Copyright reserved