higher education & training

Department:
Higher Education and Training
REPUBLIC OF SOUTH AFRICA

NATIONAL CERTIFICATE

BUILDING AND STRUCTURAL SURVEYING N4

(8060034)

30 November 2022 (X-paper)
09:00–12:00

Drawing instruments and nonprogrammable calculators may be used.

This question paper consists of 6 pages, 1 diagram sheet and 1 formula sheet.

300Q1E2230

Copyright reserved

DEPARTMENT OF HIGHER EDUCATION AND TRAINING
REPUBLIC OF SOUTH AFRICA

NATIONAL CERTIFICATE
BUILDING AND STRUCTURAL SURVEYING N4
TIME: 3 HOURS
MARKS: 100

INSTRUCTIONS AND INFORMATION

1. Answer all the questions.
2. Read all the questions carefully.
3. Number the answers according to the numbering system used in this question paper.
4. Start each question on a new page.
5. Use only a black or blue pen.
6. Write neatly and legibly.

Copyright reserved

QUESTION 1

Define each of the following terms:

1.1 Parallax

1.2 Magnification of a telescope

1.3 Resolving power of a telescope

1.4 Forward and back bearings

1.5 Irregular variations

(5 × 3) **[15]**

QUESTION 2

2.1 Name the FOUR main operations of a surveyor in the field. (4)

2.2 Name FIVE points to observe when taking field notes. (5)

[9]

QUESTION 3

Choose a term from COLUMN B that matches a description in COLUMN A. Write only the letter (A–J) next to the question number (3.1–3.10) in the ANSWER BOOK.

COLUMN A		COLUMN B	
3.1	Used to measure the area of an irregular shape	A	foresight
3.2	Influence preventing a compass needle from pointing to magnetic north	B	diurnal variations
3.3	Determining direction underground	C	bonding rod
3.4	Used in trenches for control of excavations	D	magnetic declination
3.5	Changes in direction of a needle during the day, varying with locality and season	E	planimeter
3.6	Consists of a curved glass tube partly filled with a liquid such as alcohol, chloroform, etc.	F	local attraction
3.7	Slow variations in declination that take place with the lapse of time	G	secular variations
3.8	Last reading taken after an instrument has been set up	H	plain member
3.9	Angle between the true and magnetic meridians of any place	I	bubble tube
3.10	Obtaining the area of an irregular figure	J	miner disk

(10 × 1) **[10]**

Copyright reserved

QUESTION 4

4.1 Distinguish between *natural scales* and *engineering scales*. (2 + 2) (4)

4.2 A rectangular farm measures 2 200 m × 800 m.

Draw the farm to scale 1:20 000. (4)

4.3 The area of a rectangular site is 0,98 ha. The site is twice as long as it is wide.

Calculate the perimeter of the site. (6)

4.4 Calculate the distance between two points on a map if the representative fraction is 1:5 000 and the actual ground distance is 2 450 mm. (3)

[17]

QUESTION 5

Show, by means of a simple sketch, how each of the following details are shown on a detail map:

5.1 Footpaths

5.2 Playgrounds

5.3 All street signs

5.4 Hardened roads

5.5 Oil pipeline

(5 × 2) **[10]**

QUESTION 6

6.1 Name FOUR main methods of surveying with a plane table. (4)

6.2 Give FIVE uses of a theodolite. (5)

6.3 Name FOUR measurement methods. (4)

[13]

QUESTION 7

The field book on the DIAGRAM SHEET (attached) gives the details of the chain survey to establish the position of a building measuring 20,0 m × 12,0 m. All measurements are given in metres.

Plot the stations, lines and details to scale 1:500. **[10]**

Copyright reserved

QUESTION 8

8.1 It is required to set off a 100 m track on a sports field with a 60 m steel tape known to be 0,03 m too long.

Which distance must be measured off with this incorrect tape in order to get an accurate length of 100 m? (4)

8.2 A plot of ground was measured with a steel tape which is 0,2% too short and its area was found to be 2 ha.

Calculate the correct area of the plot and round off the answer to the nearest three decimals. (5)

8.3 The distance between two anchor towers of an overhead cableway across a gorge was measured as 180,000 m by means of a 200 m steel tape with a mass of 2,3 kg.

Determine the correct distance between the towers if a tension of 90 N was applied to the tape. (7)

[16]

TOTAL: 100

Copyright reserved

(8060034)

DIAGRAM SHEET

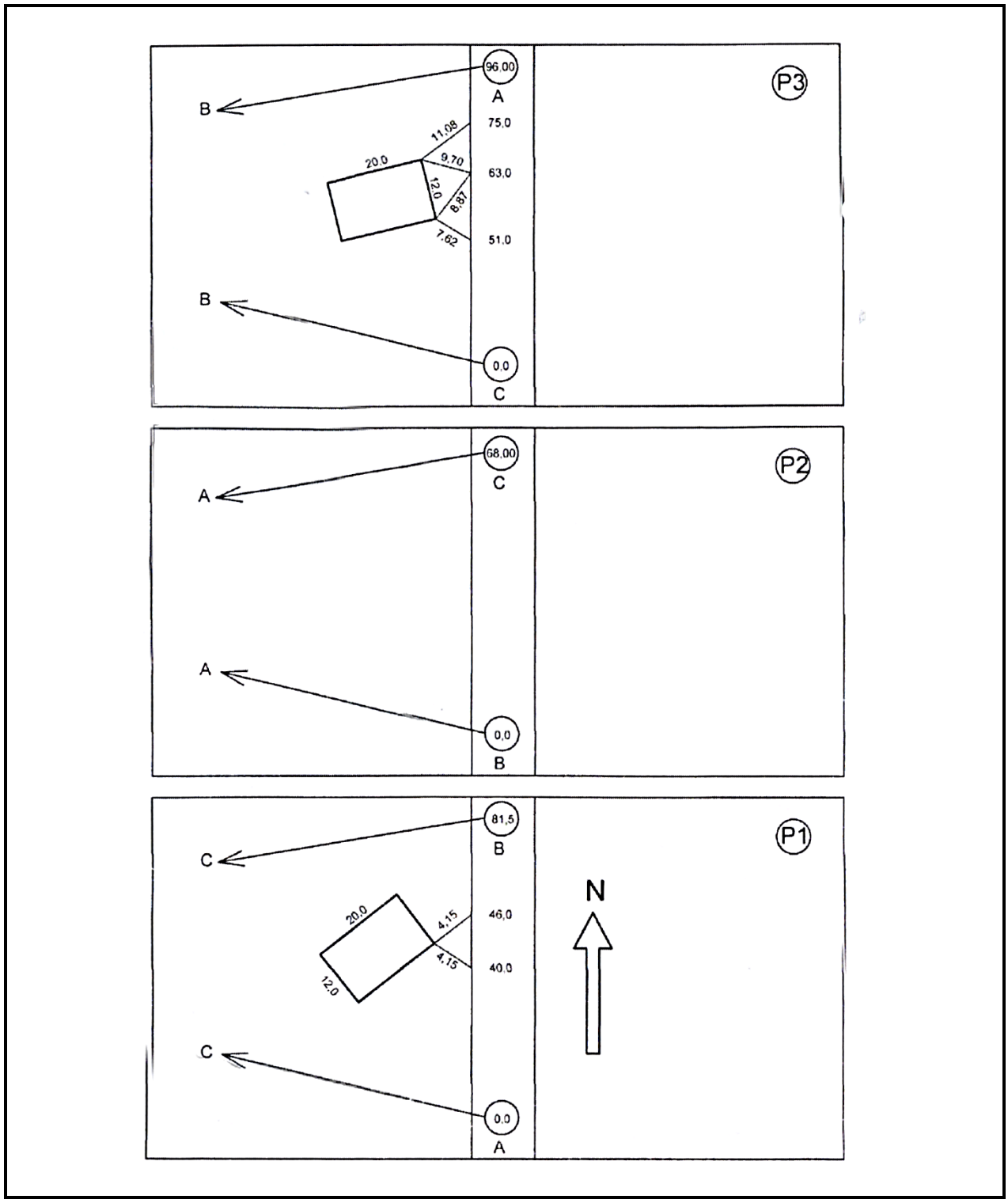

Copyright reserved

FORMULA SHEET

Any other applicable formula may also be used.

1. $A = ½b \perp h$

2. $A = \sqrt{s(s-a)(s-b)(s-c)}\,,\ \frac{a+b=c}{2}$

3. $A = \frac{(a+b)h}{2}$

4. $A = ah$

5. $A = \frac{d}{3}[(y_1 + y_n) + 2(y_3 + y_5 + \ldots + (y_n - 2) + 4(y_2 + y_4 + \ldots + y_n - 1)]$

6. $A = d\,[(\frac{y_2 + y_n}{2} + y_2 + y_3 + \ldots + y_n - 1]$

7. $C = L\ e\ (t_m - t_{s)}$

8. $C = \frac{W^2 L^3}{24T^2}$

9. $C = L\ (1 - \cos\theta)$

10. $C = H\ (\sec - 1)$

11. $C = \frac{LH}{R}$

12. $A = \frac{1}{2}ab\sin C$

Copyright reserved