higher education & training

Department:
Higher Education and Training
REPUBLIC OF SOUTH AFRICA

NATIONAL CERTIFICATE

BUILDING AND STRUCTURAL SURVEYING N4

(8060034)

7 December 2023 (X-paper)
09:00–12:00

Drawing instruments and nonprogrammable calculators may be used.

This question paper consists of 5 pages and 1 formula sheet.

297Q1G2307

Copyright reserved

DEPARTMENT OF HIGHER EDUCATION AND TRAINING
REPUBLIC OF SOUTH AFRICA

NATIONAL CERTIFICATE
BUILDING AND STRUCTURAL SURVEYING N4
TIME: 3 HOURS
MARKS: 100

INSTRUCTIONS AND INFORMATION

1. Answer all the questions.
2. Read all the questions carefully.
3. Number the answers according to the numbering system used in this question paper.
4. Start each section on a new page.
5. Use only a black or blue pen.
6. Write neatly and legibly.

Copyright reserved

QUESTION 1: BASIC PRINCIPLES OF SURVEYING

Define the following survey terms:

1.1 Trilateration

1.2 Military surveying

1.3 Level line

1.4 Systematic errors

1.5 Parallax

(5 × 3) **[15]**

QUESTION 2: LINEAR MEASUREMENTS

2.1 A length of 250 m was measured with a steel tape at an altitude of 1 700 m below sea level. The radius of the earth is 6 575 km. Calculate the horizontal distance. (3)

2.2 A measure of 94,50 was obtained with a steel tape at 30 °C. Calculate the standard temperature if the co-efficient of linear expansion is 0,0000112/°C and the temperature correction is – 0,017 m. (4)

2.3 A length of 84,00 m was measured between two points at an angle 6°35'40'' from horizontal. Calculate the correct horizontal distance between two points. (3)

2.4 State FIVE disadvantages of chain measurement. (5)
[15]

QUESTION 3: SETTING OUT

3.1 What are ranging rods? (2)

3.2 FIGURE 2, DIAGRAM SHEET 1 (attached) shows an Abney level. Label the parts by writing the answer net to the question number (3.2.1–3.2.8) in the ANSWER BOOK. (8)
[10]

QUESTION 4: BASIC CONCEPTS

4.1 A trigonometrical beacon is 1,25 km from where you are standing. How far from the beacon would you be on the map if the scale was 1:20 000? Provide the answer in mm. (4)

4.2 Draw the South African co-ordinate system showing Y and X axis and also where it increases and decreases in all four quadrants. (6)
[10]

Copyright reserved

QUESTION 5: ANGULAR MEASUREMENT

5.1 Convert the following whole circle bearings (WCB) to quadrant bearing (QB).

5.1.1 30° 20′

5.1.2 140° 50′

5.1.3 240° 30′

(3 × 2) (6)

5.2 Convert the following quadrant bearings (QB) to whole circle bearings (WCB).

5.2.1 N 30° 20′ E

5.2.2 S 38° 45′ E

(2 × 2) (4)

[10]

QUESTION 6: COMPASS SURVEYING

Discuss the function of the following in a compass:

6.1 Prism

6.2 Mirror

6.3 A dumping device

6.4 The graduation ring

6.5 Sunglasses

(5 × 2) **[10]**

Copyright reserved

QUESTION 7: AREA AND VOLUME

7.1 A triangular piece of land has sides of 200 m, 130 m and 100 m. Calculate the area of the land in hectares. (5)

7.2 FIGURE 1 below shows a piece of land. The off-sets from the survey line to the boundary line is indicated in the sketch. The distance between the off-sets is 4,5 m. Calculate the area between the survey line and volume, using the trapezoidal rule.

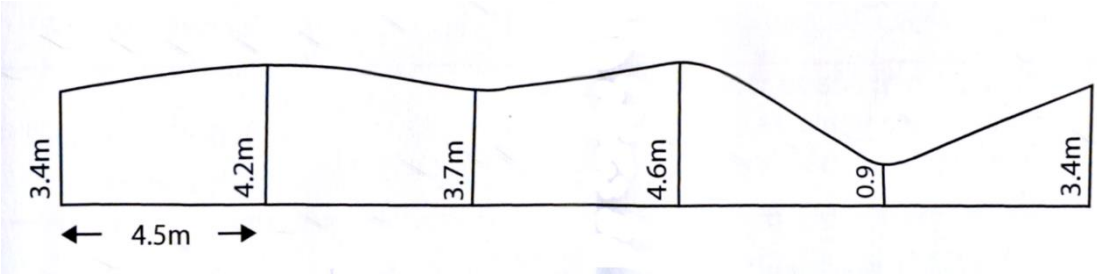

FIGURE 1

(5)
[10]

QUESTION 8: PLANE TABLE

8.1 Define *plane table surveying*. (2)

8.2 State SIX disadvantages of using plane table surveying. (6)

8.3 State five important general instructions when working with a plane table. (3)
[10]

QUESTION 9: HEIGHT MEASUREMENT

9.1 State SIX uses of levelling in surveying. (6)

9.2 State FOUR natural causes of errors in levelling. (4)
[10]

TOTAL: 100

Copyright reserved

BUILDING AND STRUCTURAL SURVEYING N4

DIAGRAM SHEET 1

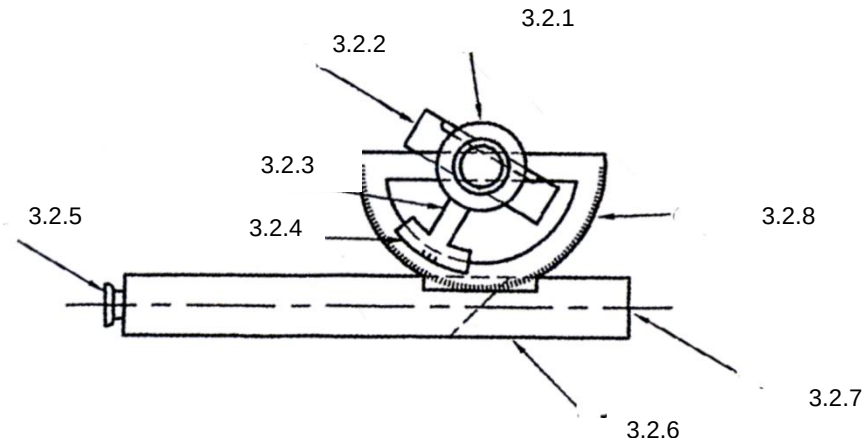

FIGURE 2

Copyright reserved

BUILDING AND STRUCTURAL SURVEYING N4

FORMULA SHEET

Any other applicable formula may also be used.

1. $A = {}^{1}/_{2}\, bx \perp h$

2. $A = \sqrt{s(s-a)(s-b)(s-c)}\,,\ \frac{a+b=c}{2}$

3. $A = \frac{(a+b)x\ h}{2}$

4. $A = a \times h$

5. $A = \frac{d}{3}[(y_1 + y_n) + 2(y_3 + y_5 + \ldots + (y_n - 2) + 4(y_2 + y_4 + \ldots + y_n - 1)]$

6. $A = d\ [(\frac{y_2 + y_n}{2} + y_2 + y_3 + \ldots + y_{n-1}]$

7. $C = L \times e \times (t_m - t_s)$

8. $C = \frac{W^2 L^3}{24T^2}$

9. $C = L\ (1 - \cos\theta)$

10. $C = H\ (\sec - 1)$

11. $C = \frac{LH}{R}$

12. $A = \frac{1}{2} abSinC$

Copyright reserved