higher education & training

Department:
Higher Education and Training
REPUBLIC OF SOUTH AFRICA

MARKING GUIDELINE

NATIONAL CERTIFICATE

BUILDING AND STRUCTURAL CONSTRUCTION N4

04 December 2023

This marking guideline consists of 10 pages.

Copyright reserved

QUESTION 1: BONDING

SEE DRAWING FOR MODEL ANSWER

Overall impression	**8**
Accuracy	**3**
Line work	**3**
Balanced layout and neatness	**1**
TOTAL:	**15**

NOTE NO marks should be allocated for any part of the drawing that is in an incorrect position, but marks should be allocated for hatching of that component.
Marks should be allocated for neatness, correct title and scale if the drawing is completely incorrect.

QUESTION 2: CENTERING OF SEMI-CIRCULAR ARCH

SEE DRAWING FOR MODEL ANSWER

RUBRIC FOR DRAWING QUESTION 2: ARCH BRICKWORK			
PART OF THE DRAWING	**MARKING CRITERIA**	**POSSIBLE MARK**	**REMARKS**
Tie beam, struts, cross brace	Correct position	3	
	Labelling	3	
Ribs	Correct position	1	
	Correct shape	1	
	Labelling	1	
Lagging	Correct position	1	
	Labelling	1	
Sleepers, bearer	Correct position	2	
	Hatching	2	
	Labelling	2	
Prop	Correct position	1	
	Labelling	1	
	Span dimension	1	
	Subtotal	**20**	
	Divide by	**2.5**	
Overall impression		**8**	
Accuracy		**3**	
Line work		**3**	
Balanced layout and neatness		**1**	
TOTAL		**15**	

NOTE: NO marks should be allocated for any part of the drawing that is incorrect position but marks should be allocated for hatching of that component.
Marks should be allocated for neatness, correct title and scale if the drawing is completely incorrect.

Copyright reserved

QUESTION 3: INDUSTRIAL STEEL WINDOW

SEE DRAWING FOR MODEL ANSWER

Correctness		9
Soldier	1	
Cavity	1	
Sheet lead	1	
Outer reveal	1	
Head of window	1	
Rail of sash	1	
Inner revealed plastered	1	
Reinforced Concrete Lintel	2	
Accuracy		2
Plaster		1
Labels		2
Hatching		1
	TOTAL:	15

NOTE NO marks should be allocated for any part of the drawing that is incorrect position but marks should be allocated for hatching of that component.
Marks should be allocated for neatness, correct title and scale if the drawing is completely incorrect.

QUESTION 4: ROOF AND ROOF COVERINGS

SEE DRAWING FOR MODEL ANSWER

2 Correct wall	1
Ro1of construct	2
Roof covering	2
Closed eave	1
Ceiling construct	2
Rainwater goods	2
Nail plates	1
Accuracy	3
Finishes	1
Labels	2
Total Marks	17

NOTE: NO marks should be allocated for any part of the drawing that is incorrect position but marks should be allocated for hatching of that component.
Marks should be allocated for neatness, correct title and scale if the drawing is completely incorrect.

Copyright reserved

SEE DRAWING FOR MODEL ANSWER

QUESTION 6.1

Overall impression	**6**
Accuracy	**2**
Line work	**1**
Balanced layout and neatness	**1**
Total marks	**10**

QUESTION 6.2

Overall impression	**6**
Accuracy	**2**
Line work	**1**
Balanced layout and neatness	**1**
Total marks	**10**

NOTE NO marks should be allocated for any part of the drawing that is in an incorrect position, but marks should be allocated for hatching of that component.
Marks should be allocated for neatness, correct title and scale if the drawing is completely incorrect.

Copyright reserved

QUESTION 1: BONDING

SEE DRAWING FOR MODEL ANSWER

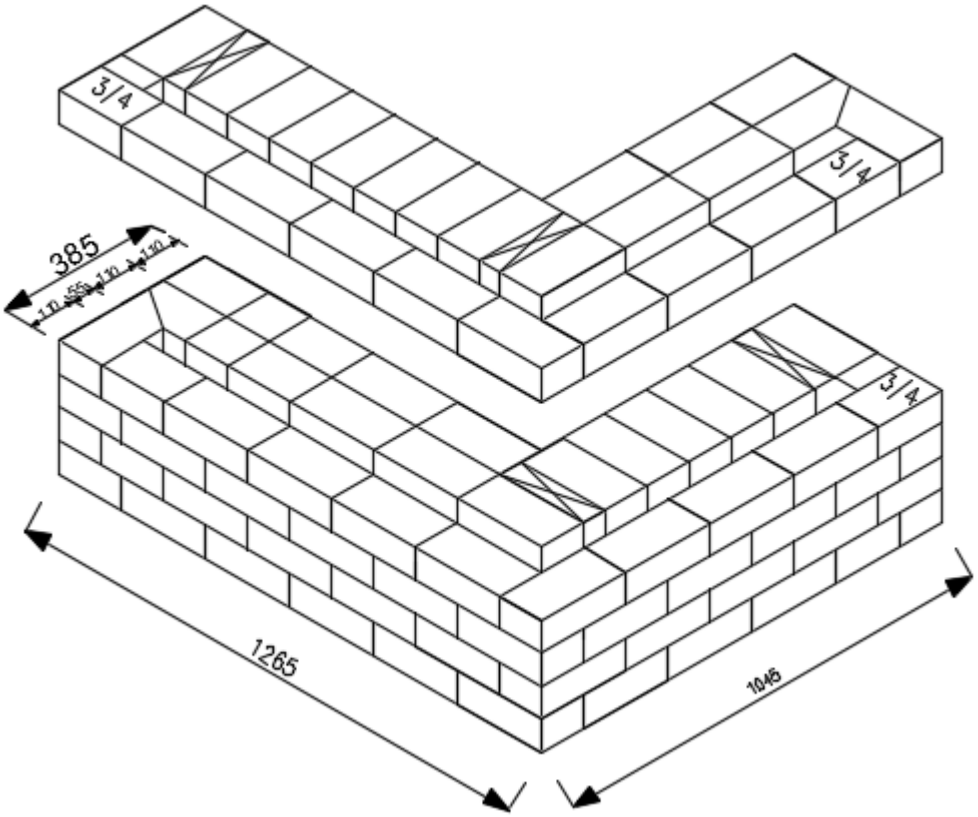

SCALE 1:10

QUESTION 2: CENTERING OF SEMI-CIRCULAR ARCH

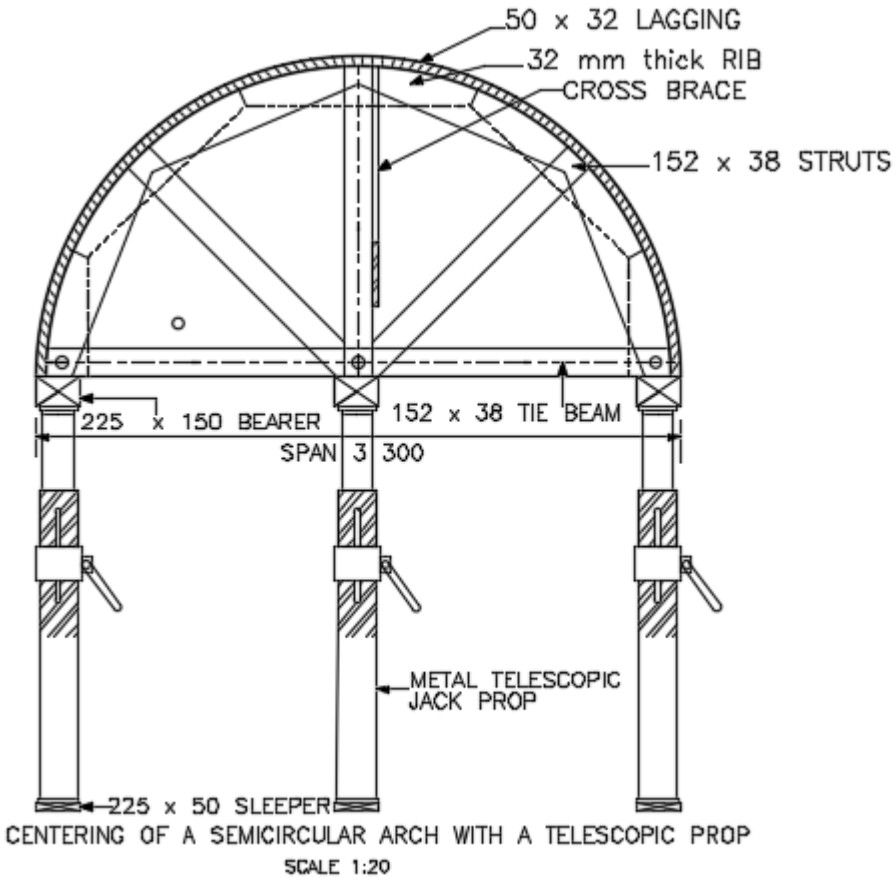

CENTERING OF SEMI-CIRCULAR ARCH

SCALE 1:20

NOTE: NO marks should be allocated for any part of the drawing that is incorrect position but marks should be allocated for hatching of that component.
Marks should be allocated for neatness, correct title and scale if the drawing is completely incorrect.

Copyright reserved

QUESTION 3: INDUSTRIAL STEEL WINDOW

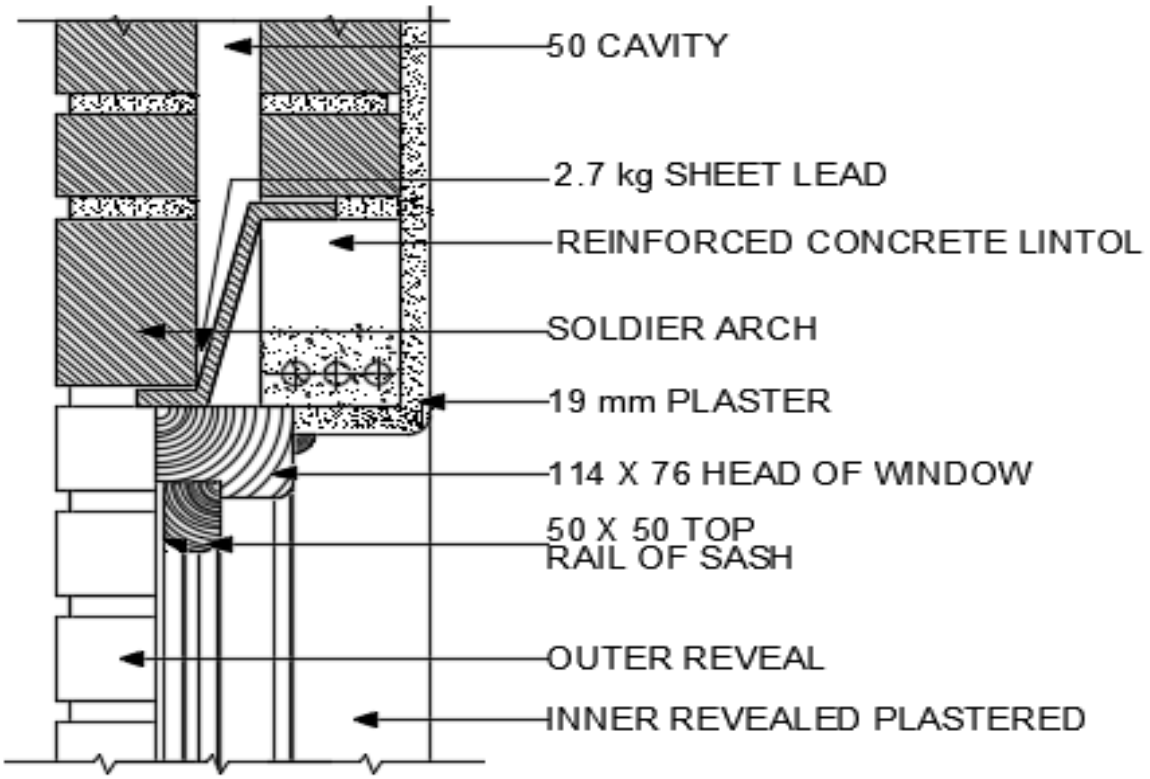

A VERTICAL THROUGH 270 mm CAVITY WALL SHOWING TREATMENT AT HEAD WINDOW

SCALE 1:5

NOTE: NO marks should be allocated for any part of the drawing that is in an incorrect position, but marks should be allocated for hatching of that component.
Marks should be allocated for neatness, correct title and scale if the drawing is completely incorrect.

Copyright reserved

QUESTION 4: ROOF AND ROOF COVERINGS

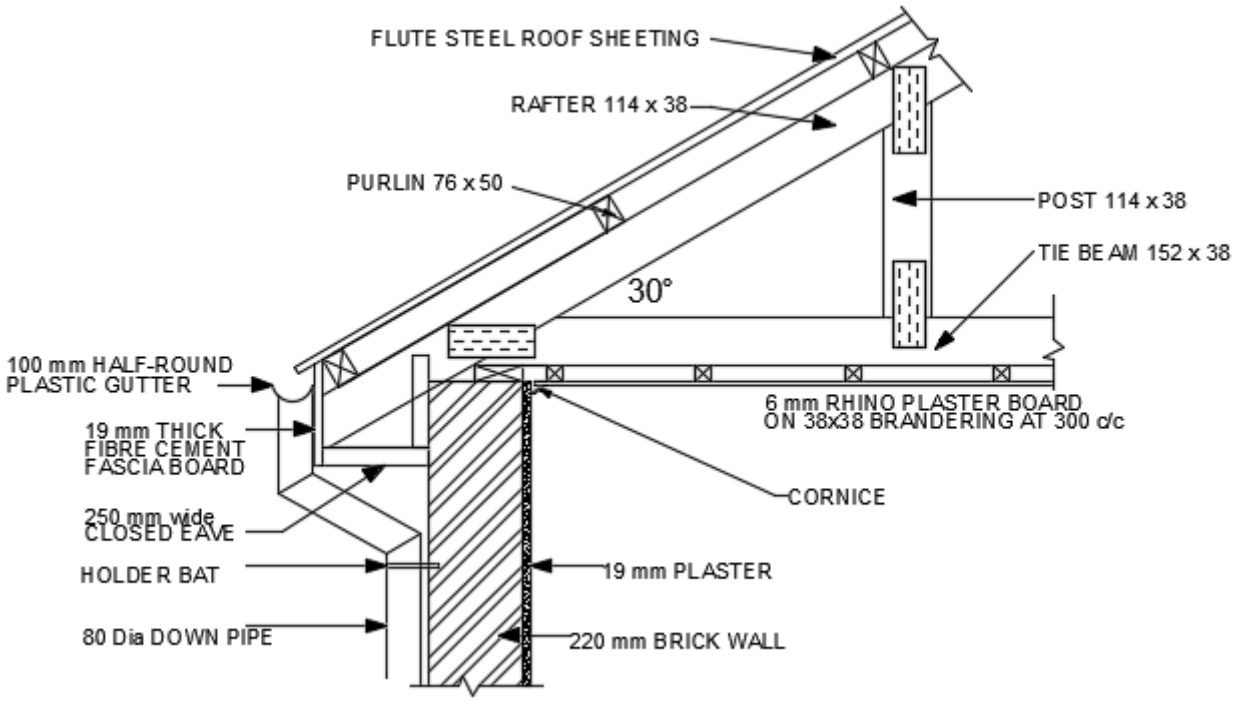

A VERTICAL SECTION THROUGH ONE OF THE EAVES

SCALE 1:10

NOTE: NO marks should be allocated for any part of the drawing that is in an incorrect position, but marks should be allocated for hatching of that component.
Marks should be allocated for neatness, correct title and scale if the drawing is completely incorrect.

QUESTION 5: CEILINGS

5.1
- A container to hold the joint filler.
- Tape.
- A 200 mm jointing applicator for smoothing the second coat.
- A taping knife for laying on the first coat of filler.
- Joint filler. (Any 3 × 1) (3)

5.2
- It is cheaper than plaster.✓
- It can be put up faster.✓
- It is less likely to develop any crack or holes.✓
- They must discover the potential market for the product which is proposed to be build.✓✓ (3)

5.3
- It is easily punctured.
- Because of expansion and construction as weather conditions change or house settles, the taped between the panels may open up and the nails holding the board in place may pull, or pop, away from the surfaces. (2)

5.4
- A cheap all-purpose building board which does not wet easily and is therefore ideal for internal and external use.
- Light.
- Easy to handle and erect.
- Does not catch fire easily and perfect protection against fire.
- Resistant to corrosion.
- Manufactured to the highest internal quality standards.
- Some flat sheets carry a SABS mark for compliance to the specification SABS 803.
- Good thermal properties. (Any 5 × 1) (5)

5.5
- Fix the rails to the ceiling at 600 centres.
- Set the rails on the lines and fix, using the specified fixing.
- Fix the rails in a continuous run around the perimeter of the ceiling.
- Where panel ends, fix two strips of rail, approximately 100 mm apart to support the panel ends.
- Fix panels to the rail at 300 mm centres using 42 mm plasterboards screws.
- Locate the fixings below the dotted lines marked on the rails.
- At this stage do not install the fixings for the panel edges.
- Do not install any fixing within 80 mm of the panel edges.
- When all panels are in place, insert the fixings to all panels edges.
- Tape and seal joints and screw heads.
- Seal all perimeter joints and penetrations with acoustic sealant.

(Any 5 × 1) (5)
[18]

QUESTION 6: STRUCTURAL STEELWORK

6.1

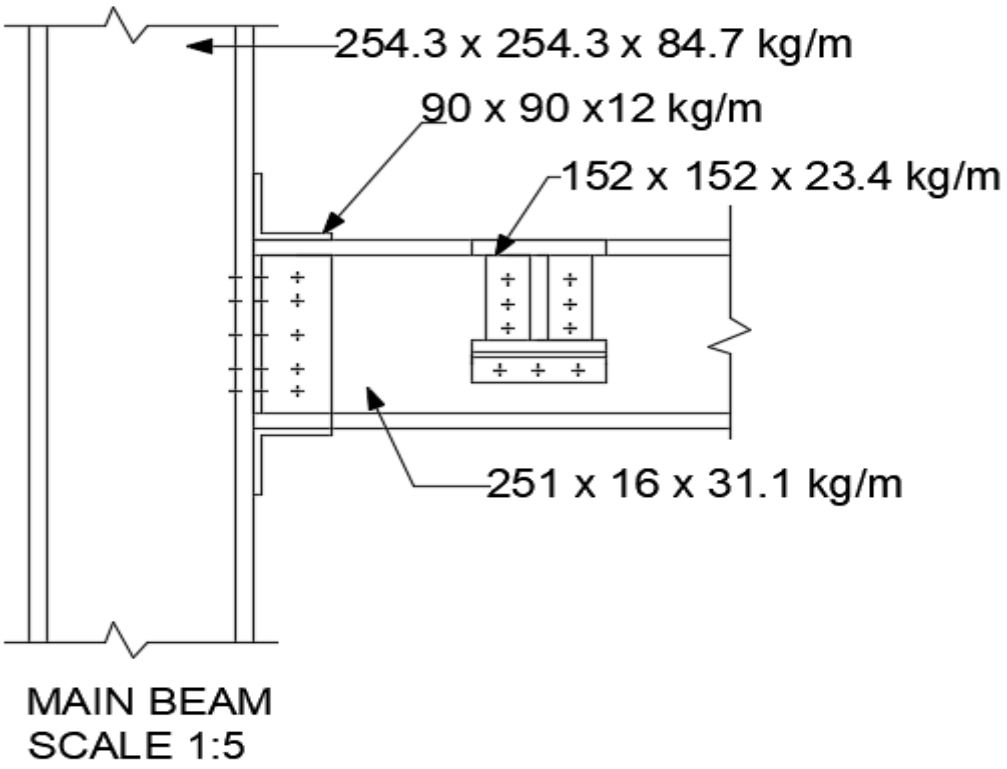

6.2

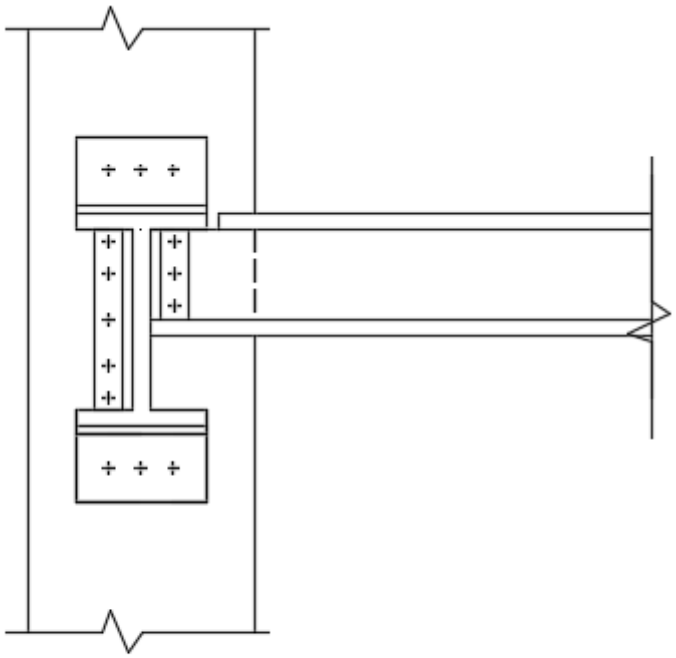

SECONDARY BEAM
SCALE 1:5

NOTE: NO marks should be allocated for any part of the drawing that is in an incorrect position but marks should be allocated for hatching of that component.
Marks should be allocated for neatness, correct title and scale if the drawing is completely incorrect.

TOTAL: 100

Copyright reserved