higher education & training

Department:
Higher Education and Training
REPUBLIC OF SOUTH AFRICA

# MARKING GUIDELINE

## NATIONAL CERTIFICATE

## BUILDING AND STRUCTURAL CONSTRUCTION N4

**25 November 2022**

**This marking guideline consists of 8 pages.**

Copyright reserved

## QUESTION 1

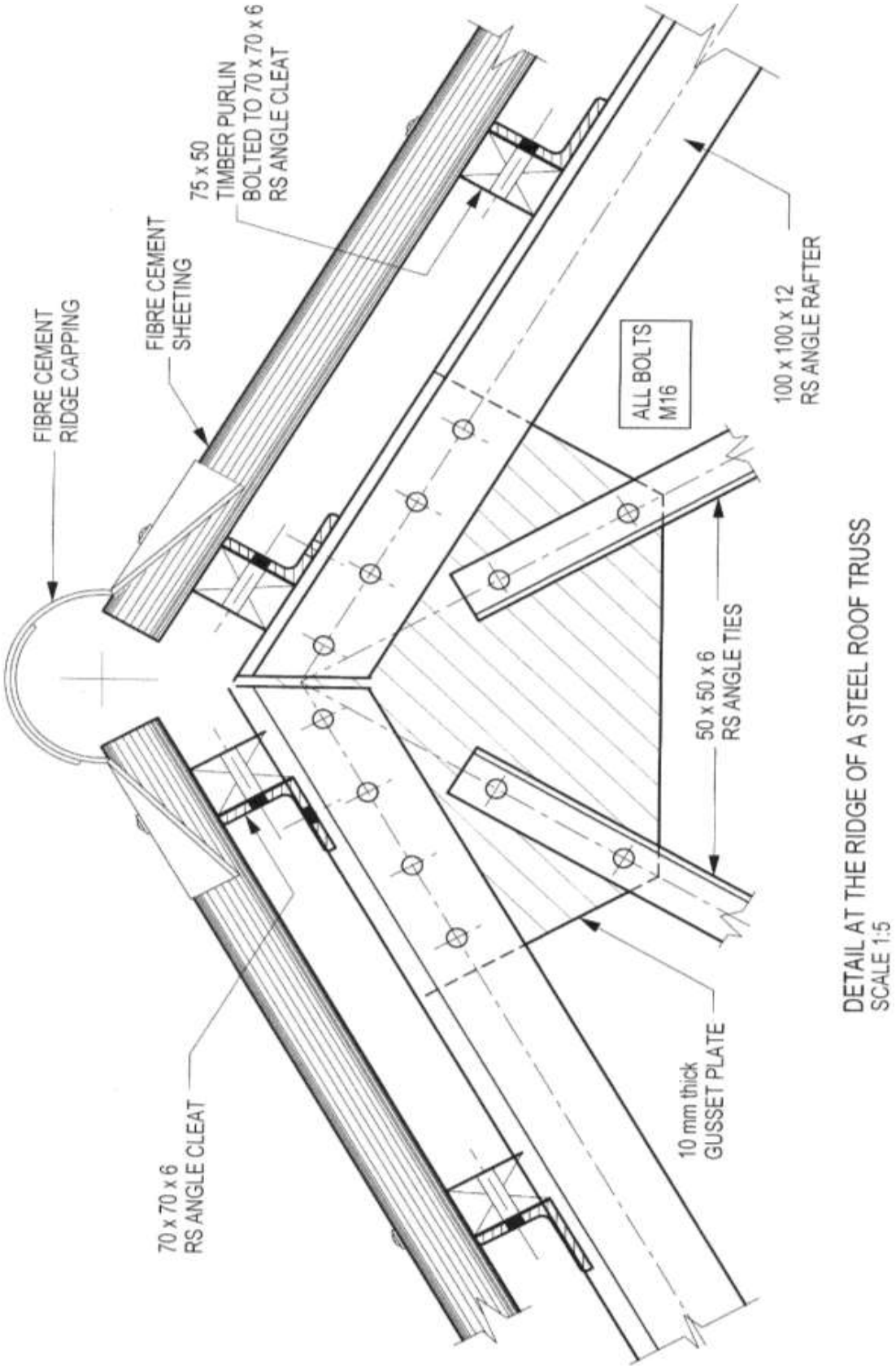


DETAIL AT THE RIDGE OF A STEEL ROOF TRUSS
SCALE 1:5

| QUESTION 1 | | |
|---|---|---|
| MARK ALLOCATION | | |
| Correctness: | | 10 |
| Angle cleat | 1 | |
| Gusset plate | 2 | |
| Ridge capping | 1 | |
| Angle rafter | 1 | |
| Cement sheeting | 1 | |
| Bolted timber purlins | 2 | |
| Angle ties | 2 | |
| | | |
| | | |
| Accuracy | | 4 |
| Title and scale | | 1 |
| Labels | | 5 |
| Total | | 20 |

**[20]**

## QUESTION 2

2 (A VERTICAL SECTION MUST NOT BE ACCEPTED) **[10]**

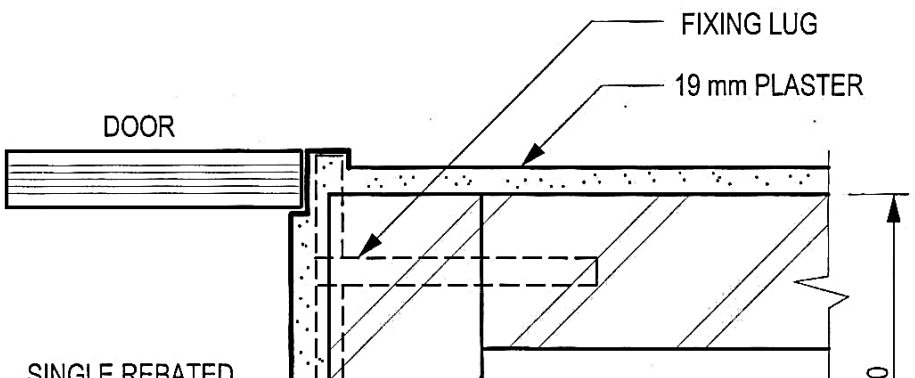

**QUESTION 3**

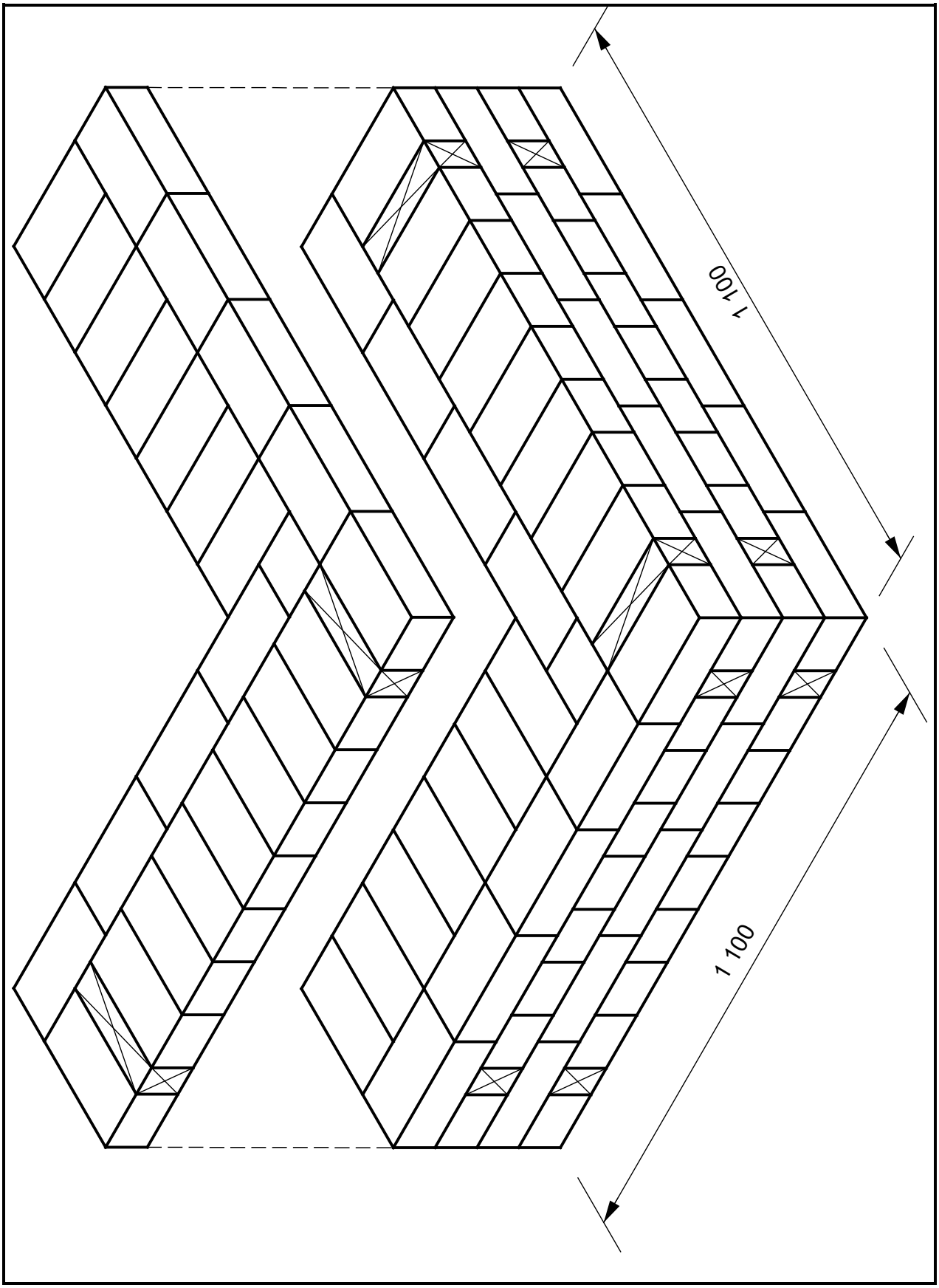


**[15]**

## QUESTION 4

4.1
- Provide a minimum depth of 150 mm between the floor and ground.
- Use precast, reinforced concrete beams to build a suspended concrete floor.
- Lay the beams in rows in a similar way to traditional timber joists, and put ends of the beam rest on the inner leaf of main walls over DPC.
- The inverted T-profile of the beam is designed to accommodate the concrete slabs.
- Lay hollow core floor slabs on the beams. (10)

4.2
- Construction is faster because no surface preparation and formwork are required.
- No curing period is required as slabs can be used straight away.
- The suspended floor can be laid in bad weather.
- Once the slabs are in position and grouted, they provide immediate working platforms.
- The installations are faster and more efficient. (10)

**[20]**

## QUESTION 5

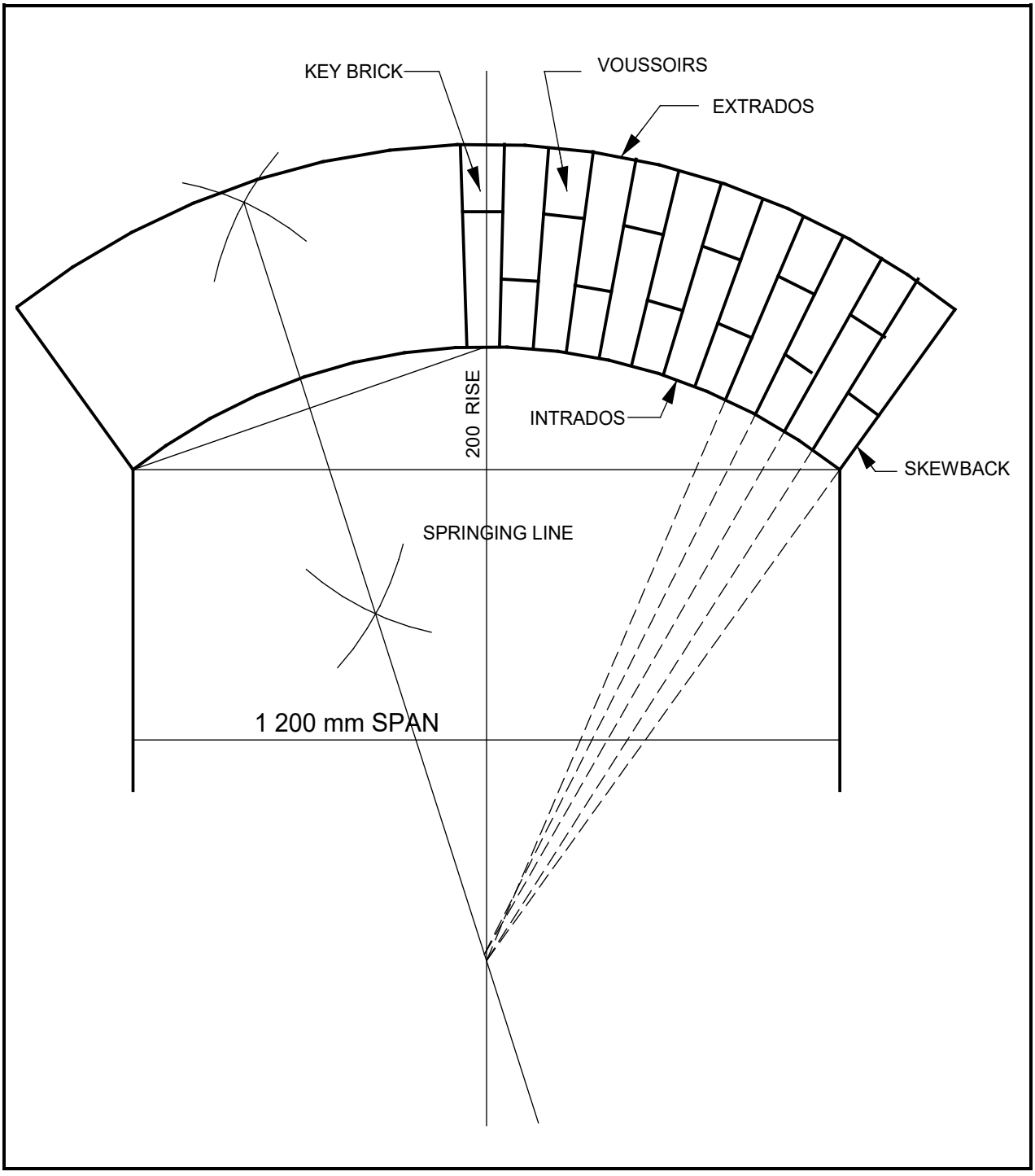


**[15]**

**QUESTION 6**

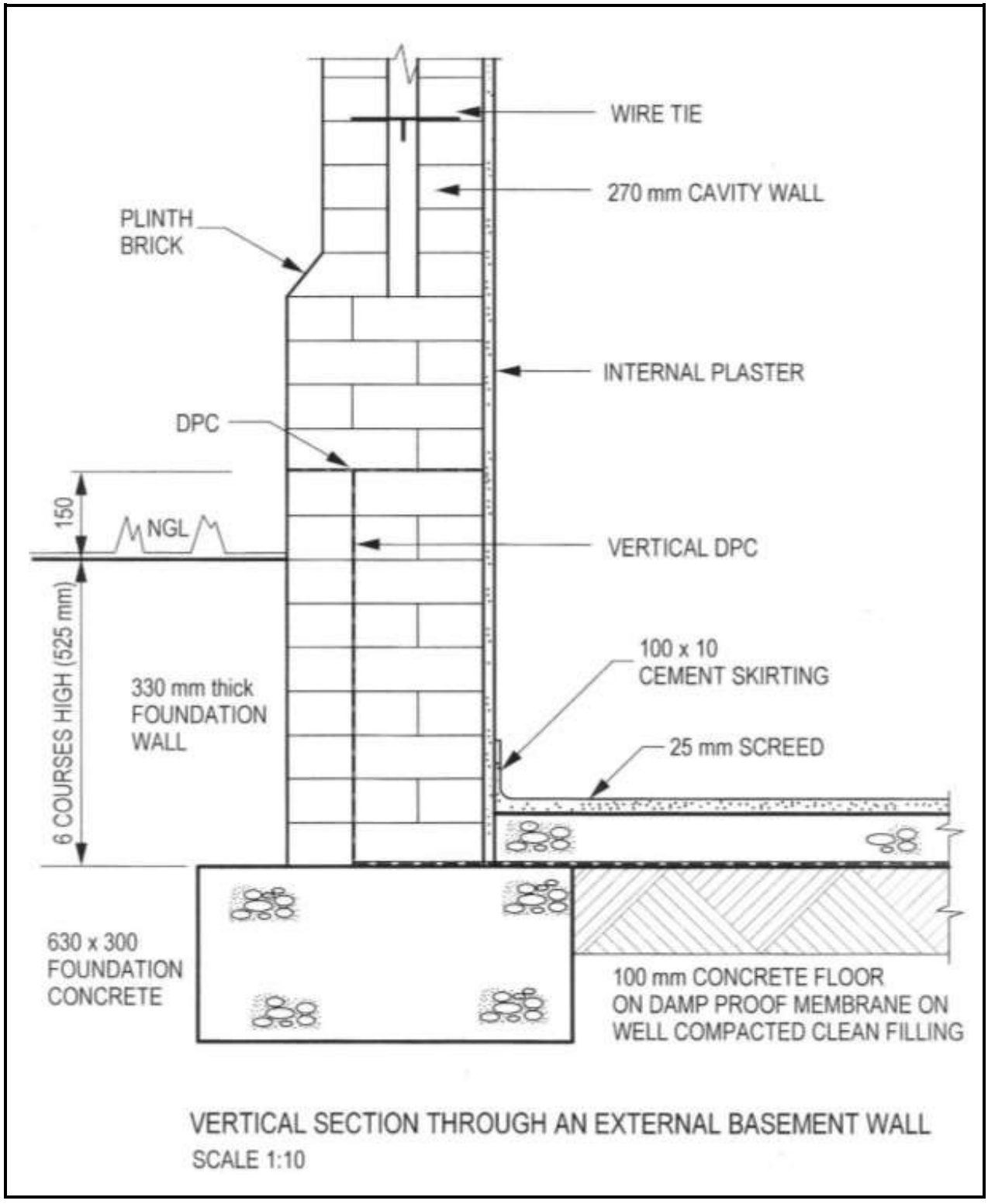


**[20]**

| QUESTION 6 | | |
|---|---|---|
| **MARK ALLOCATION** | | |
| Correctness: | | 10 |
| Conc. fnd. | 1 | |
| Heights corr. | 2 | |
| Walls corr. | 2 | |
| Conc. floor | 2 | |
| DPC | 2 | |
| Ground level | 1 | |
| | | |
| Accuracy | | 4 |
| Dimensions | | 2 |
| Labels | | 4 |
| Total | | 20 |

| QUESTION 5 | | |
|---|---|---|
| **MARK ALLOCATION** | | |
| Correctness: | | 9 |
| Brick wall width corr. | 1 | |
| Window sections corr. | 2 | |
| Glazing bar | 1 | |
| Glass & putty | 1 | |
| Window sills | 1 | |
| Fixing lug | 1 | |
| DPC | 1 | |
| Tie wire | 1 | |
| | | |
| Accuracy | | 2 |
| Plaster | | 1 |
| Labels | | 3 |
| Total | | 15 |

| QUESTION 3 | |
|---|---|
| **MARK ALLOCATION** | |
| Wall width corr. | 2 |
| Corr. bonding and line work | 3 |
| Stopped ends | 3 |
| Isometric view | 2 |
| Dimensions | 2 |
| Line work | 1 |
| Accuracy | 2 |
| Total | 15 |

**TOTAL: 100**

Copyright reserved