higher education & training

Department:
Higher Education and Training
REPUBLIC OF SOUTH AFRICA

# MARKING GUIDELINE

## NATIONAL CERTIFICATE

## BUILDING ADMINISTRATION N4

**23 November 2023**

**This marking guideline consists of 6 pages.**

Copyright reserved

## QUESTION 1

1.1 Site meetings
1.2 Drawings
1.3 Contract documents
1.4 Inspections
1.5 Reports
1.6 Architect
1.7 Schedule
1.8 Workmanship
1.9 Resident
1.10 Construction

(10 × 1) **[10]**

## QUESTION 2

2.1 F
2.2 E
2.3 D
2.4 C
2.5 B
2.6 A
2.7 J
2.8 H
2.9 I
2.10 G

(10 × 1) **[10]**

Copyright reserved 

## QUESTION 3

3.1 3.1.1

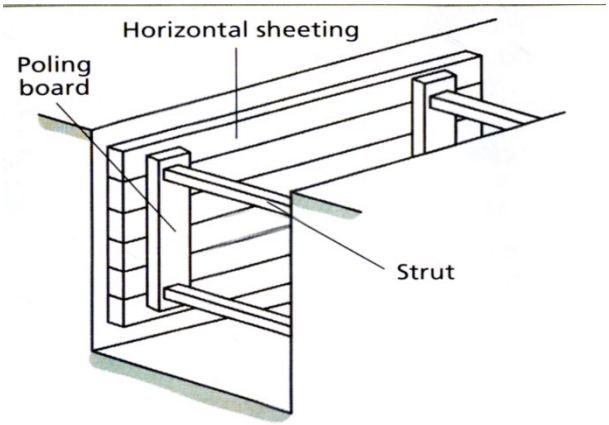


| | |
|---|---|
| Sketch | 3 |
| Any Labels | 2 |

3.1.2

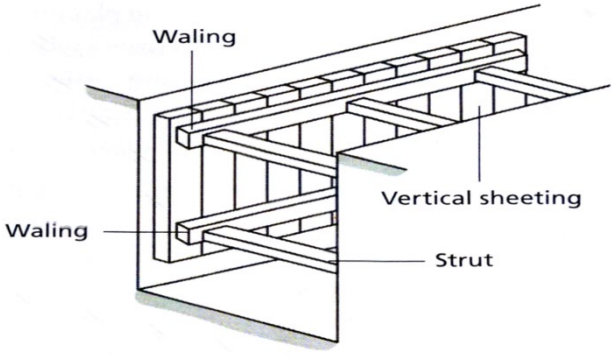


| | |
|---|---|
| Sketch | 3 |
| Any Labels | 2 |

(2 × 5) (10)

3.2 3.2.1

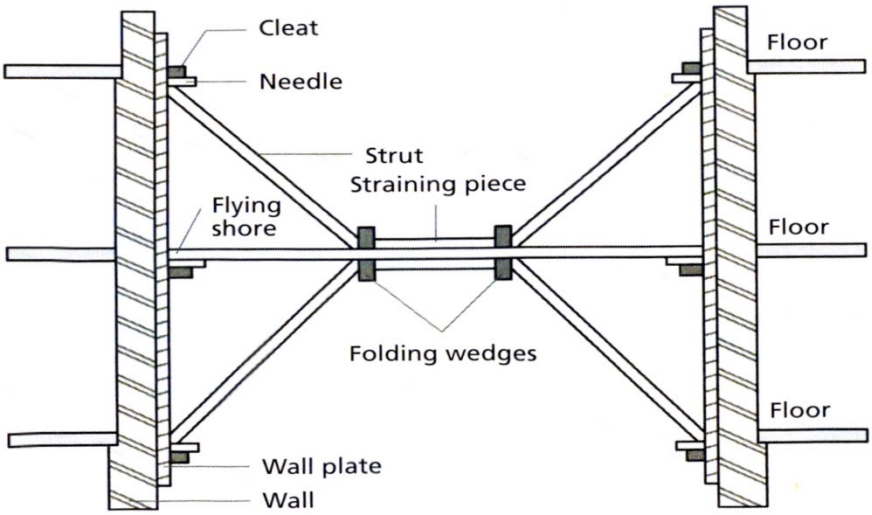


| | |
|---|---|
| Sketch | 5 |
| Any Labels | 5 |

3.2.2

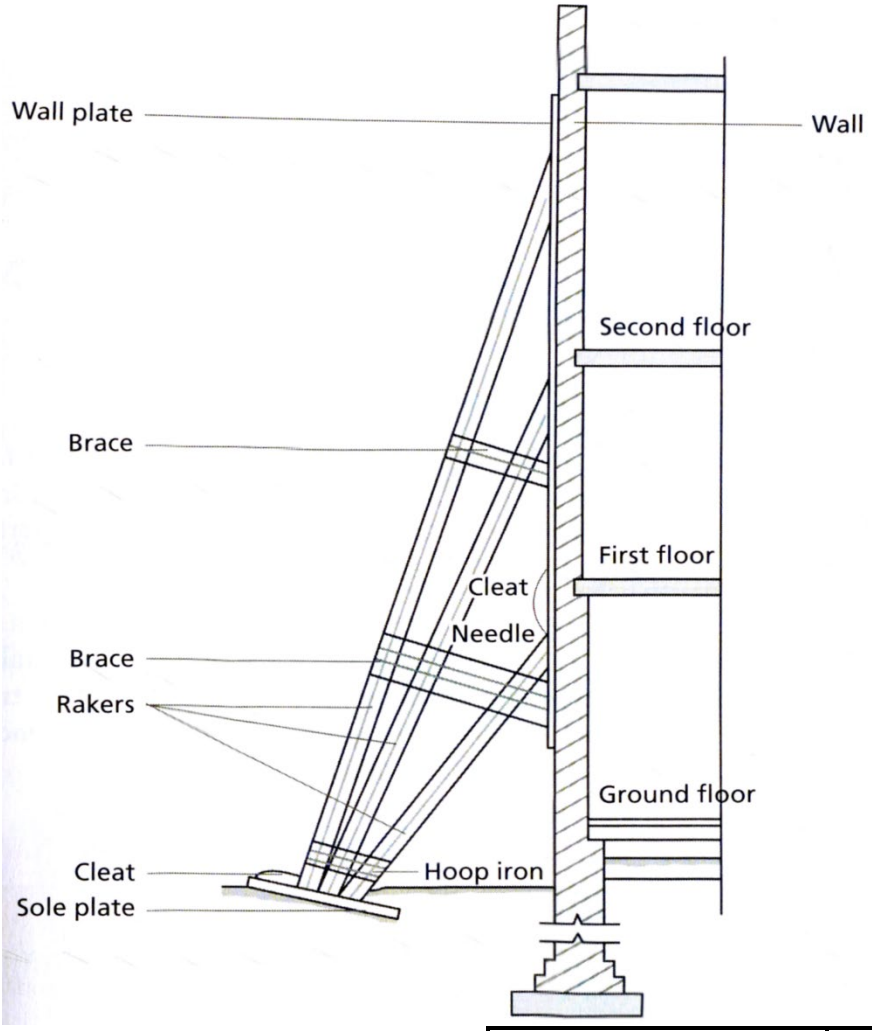


| | |
|---|---|
| Sketch | 5 |
| Any Labels | 5 |

(2 × 10) (20)

3.3
- When excavations are very deep
- The nature of the soil
- Nearby plant and vehicles on busy roads cause vibration
- The weight of the excavated material placed too close to the edge of trenches
- Weather conditions
- Workers in trenches could damage the sides by being careless with their tools
- Excavation methods could be problematic (Any 6 × 1) (6)

3.4
- Fence-in the site
- Get rid of ground and rainwater immediately by pumping and baling
- Excavate by hand
- Horizontal side piles may be used
- Use planking and strutting
- Excavate in practical stages, not leaving the excavations open for too long.

(Any 4 × 1) (4)

**[40]**

## QUESTION 4

4.1 Planking and strutting is a term used for the temporary support✓ of the sides of an excavation. It is a type of shoring and is also referred to as timbering.✓ (2)

4.2
- Prevent the sides of trenches from collapsing
- Prevent damage to adjacent properties
- Avoid wasteful labour of constantly clearing loose soil from the bottom of the trench
- Protect workers from falling soil, rocks and debris (4)

4.3
- Hard soil
- Firm soil
- Loose, dry soil
- Soft, wet soil (4)

**[10]**

## QUESTION 5

5.1 To produce a smooth, level surface✓ finish to concrete surface beds✓

5.2 Designed to extract water from deep wells✓ and sumps and are suspended in the water that is to be removed✓

5.3 To cut the long pieces of timber✓ across the grain to the required length✓

5.4 Smoothen the door✓ after it has been assembled✓

5.5 Cut the shorter and workable lengths✓ along the grain into suitable widths✓ (5 × 2) **[10]**

## QUESTION 6

6.1 6.1.1
- By avoiding overstocking
- By supervising the offloading and handing
- By doing the proper standard quality tests when stock arrives
- By not accepting damaged material from the supplier
- By ordering the correct material and correct sizes
- Know your permanent staff
- By having a trustworthy storekeeper
- Train employees to use resources carefully and allow them to suggest ways to reduce waste (Any 5 × 1)

Copyright reserved 

6.1.2
- By increasing the price of the work
- Site must be securely fenced
- Material must not be left in sight of passers-by
- All sheds must be properly locked
- Be aware of temptation

(2 × 5) (10)

6.2 6.2.1
- The procurement department must ensure that the delivery will really take place as planned.
- The material should be ordered early in order to sort out problems in time.
- An order must be confirmed before delivery.
- Everything received must be recorded.
- Telephone orders must be confirmed in writing.
- Late and overdue deliveries need special attention. (Any 5 × 1)

6.2.2
- Practical quantities should be ordered.
- Progress on site must be taken into consideration.
- Enough material must be ordered to keep the work flowing.
- Forward copies of detailed programme of the schedules to the suppliers and stay in touch with them.
- Know exactly when to expect deliveries.
- Keep in touch with the storekeeper.
- The procurement department should not be blamed. (Any 5 × 1)

(2 × 5) (10)
**[20]**

**TOTAL: 100**

Copyright reserved