higher education & training

Department:
Higher Education and Training
REPUBLIC OF SOUTH AFRICA

MARKING GUIDELINE

NATIONAL CERTIFICATE

RADIO THEORY N3

23 November 2022

This marking guideline consists of 7 pages.

Copyright reserved

QUESTION 1

1.1 It is inconvenient to express the gain or loss in terms of watts✓ because this depends largely on the input power to the system.✓ (2)

1.2 1.2.1

$$\text{Gain of the first amplifier} = 10\,log\frac{p_{out}}{p_{in}}$$
$$= 10\,log\left(\frac{40}{4}\right)$$
$$= 10\text{ dB}✓$$

$$\text{Total gain} = \text{gain of } 1^{st} \text{ amp} + \text{gain of } 2^{nd} \text{ amp}$$
$$= 10\text{ dB} + 10\text{ dB}$$
$$= 20\text{ dB}✓$$ (2)

1.2.2

$$V_{in}(rms) = 0{,}707 \times V_{max}$$
$$= 0{,}707 \times 1{,}414✓$$
$$= 1\text{ V}✓$$

$$P_{in} = \frac{V_{in}(rms)^2}{R_{in}}✓$$
$$= \frac{1^2}{1\,000}✓$$
$$= 1\text{ mW}✓$$

$$P_{out} = P_{in}\ \text{gain of } 1^{st} \text{ amp} + \text{gain of } 2^{nd}\ \text{amp}✓$$
$$= 0{,}001 \times 10 \times 10✓$$
$$= 100\text{ mW}✓$$ (8)

[12]

QUESTION 2

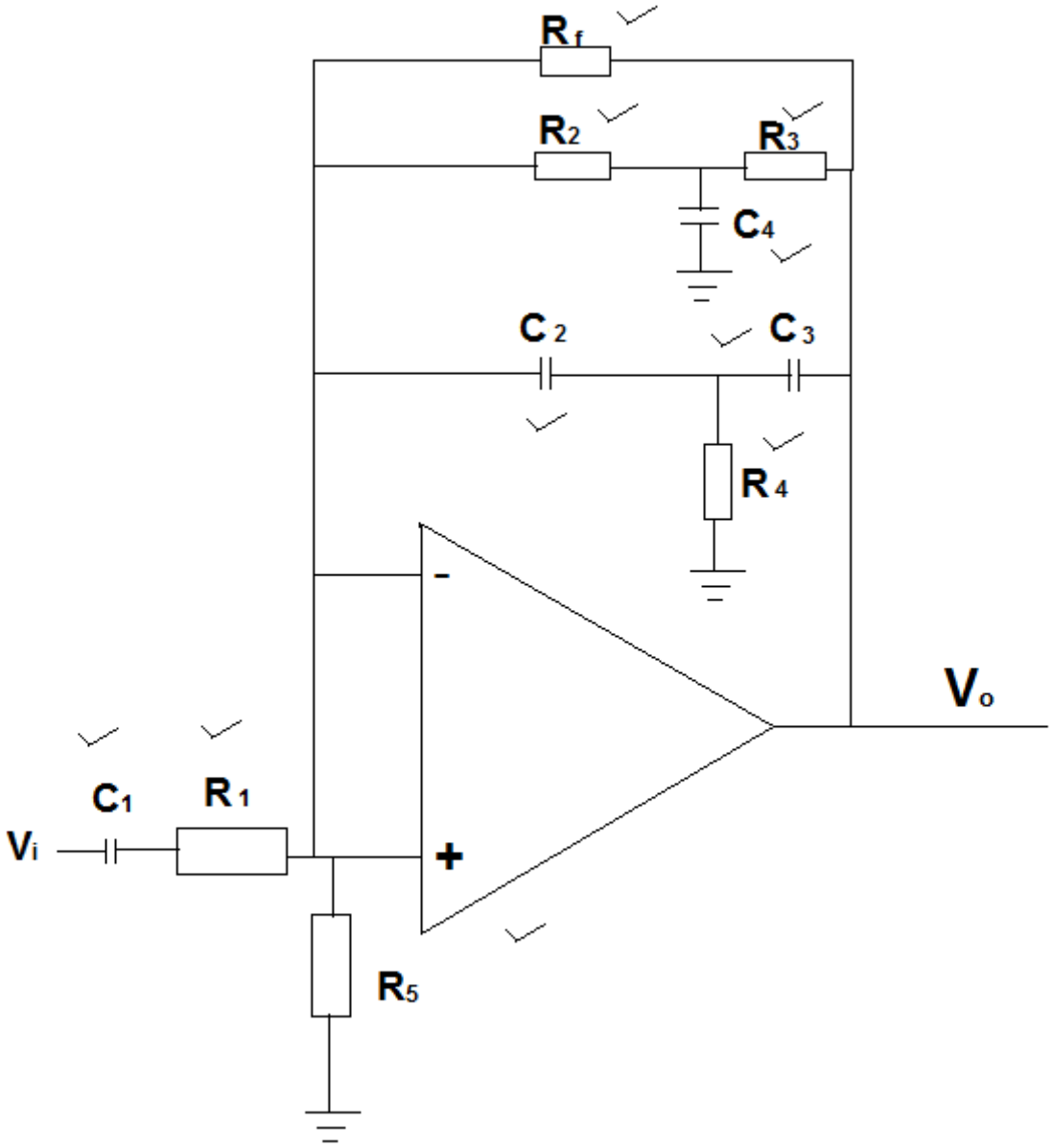

[10]

QUESTION 3

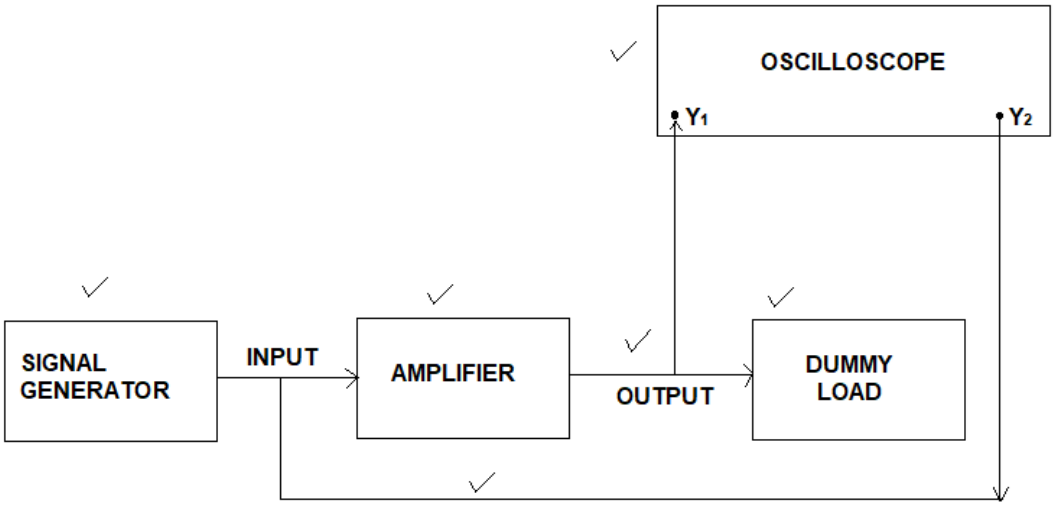

- Connect the output of the signal generator to the input of the amplifier.
- Monitor the input level by connecting the one input of the oscilloscope to the output of the generator.
- Connect a matching dummy load across the output of the amplifier.
- Monitor the output of the amplifier by applying the other input of the oscilloscope across the dummy load.
- Make sure that the amplifier is not over-driven.
- Inject frequencies covering the whole spectrum.
- Keep the input level constant.
- Monitor the output level and plot the voltage versus frequency curve. **[15]**

QUESTION 4

4.1

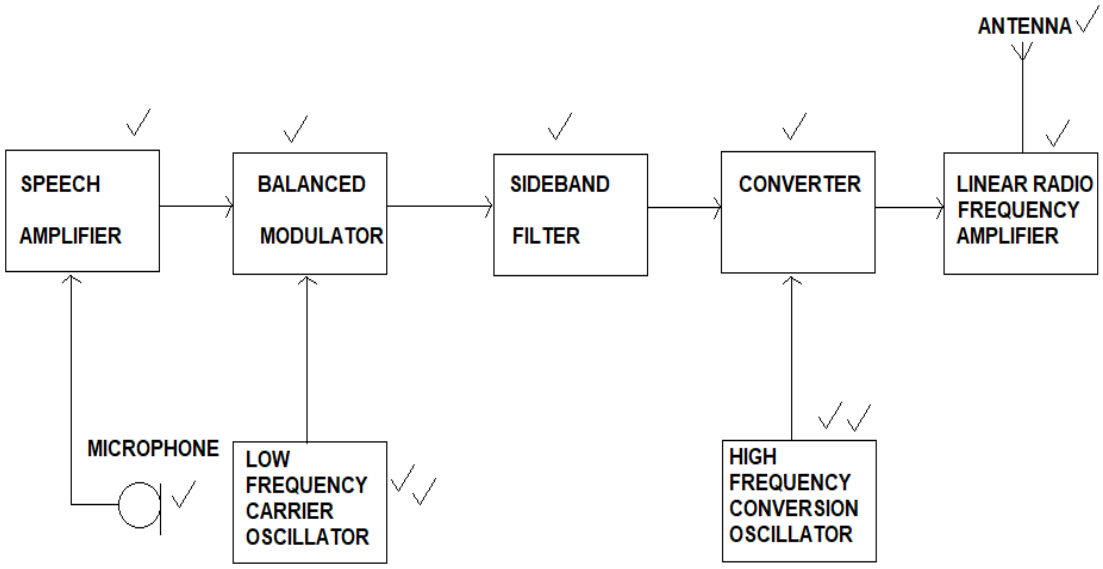

(11)

4.2 $USB_1 = f_c + f_{m1} = 4 \times 10^6 + 300 = 4{,}0003 \times 10^6$ Hz (MHz)✓

$= f_c + f_{m2} = 4 \times 10^6 + 3 \times 10^3 = 4{,}003 \times 10^6$ Hz (MHz)✓

$USB_2 = f_o + USB_1 = 14 \times 10^6 + 4{,}0003 \times 10^6 = 18{,}0003 \times 10^6$ Hz✓ (MHz)

$= f_o + USB_1 = 14 \times 10^6 + 4{,}003 \times 10^6 = 18{,}003 \times 10^6$ Hz✓ (MHz)

USB frequency spectrum: 18,0003 MHz to 18,003 MHz✓✓ (6)

4.3
- There is no output in the absence of either a modulation or oscillator signal.
- The output can only be F_{osc} + AF or F_{osc} – AF.
- This makes it easier for sideband selection and rejection of the modulation components or its harmonics. (3)

[20]

QUESTION 5

5.1

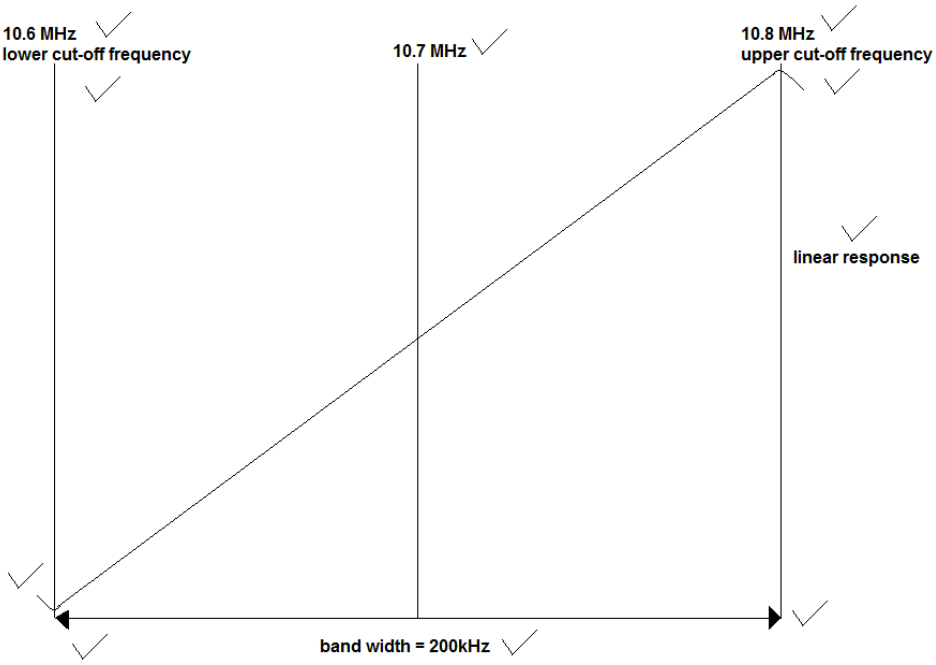

(10)

5.2 It is a system designed to maintain the amplitude of the receiver output✓ when there is a large change in carrier amplitude.✓ (2)

5.3
- It minimises the effects of fading.
- It prevents the output level from changing suddenly when tuning from weak to strong transmissions.
- It enables the design of the following stages to be based on the assumption that it will be supplied with a fairly constant signal amplitude. (3)

5.4 AGC is controlled by the amplitude of the RF signal✓ and not by the level of the audio.✓ (2)

5.5 Simple AGC operates at all signal levels,✓ while delayed AGC has its operation delayed so that it does✓ not come into effect until the signal reaches a predetermined level.✓ (3)

[20]

QUESTION 6

6.1 Microwave range 1–100 GHz (1)

6.2 A small spherical reflector is used to redirect this radiation back to the paraboloid. (2)

6.3

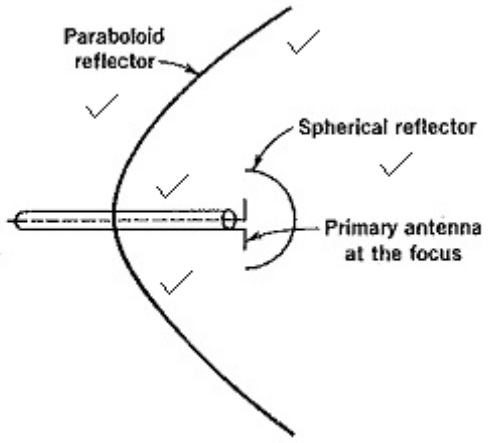

(5)
[8]

QUESTION 7

7.1 False
7.2 True
7.3 False
7.4 True
7.5 True

(5 × 2) **[10]**

QUESTION 8

8.1
- Pulse-amplitude
- Pulse-width
- Pulse-position
- Pulse-code
- Pulse-division
- Pulse-time

(Any 3 × 1) (3)

8.2
- Pulse-code
- Delta

(2)
[5]

TOTAL: 100

Copyright reserved