higher education & training

Department:
Higher Education and Training
REPUBLIC OF SOUTH AFRICA

MARKING GUIDELINE

NATIONAL CERTIFICATE

RADIO THEORY N3

30 November 2023

This marking guideline consists of 6 pages.

Copyright reserved

QUESTION 1

1.1 False
1.2 True
1.3 False
1.4 False
1.5 True
1.6 False
1.7 True
1.8 False
1.9 True
1.10 False

(10 × 1) **[10]**

QUESTION 2

2.1
- Cathode-ray tube
- Horizontal amplifier
- Vertical amplifier
- Time-base generator
- Triggering circuit
- Power supply

(6)

2.2

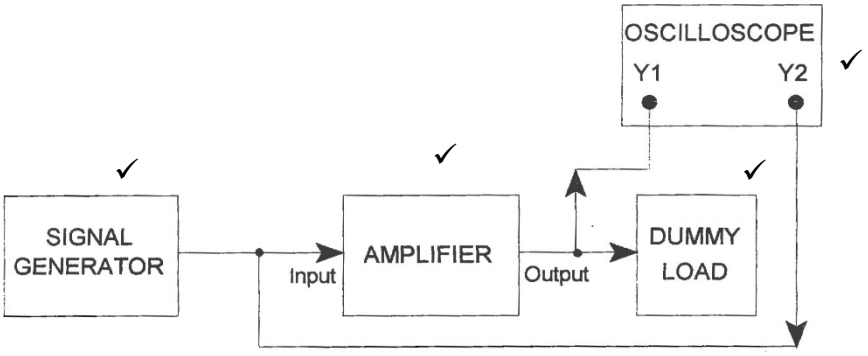

(1 for each labelled block) (4)

2.3 Can be used as a modulation signal ✓for an RF-carrier✓ (2)

2.4 $\text{Time period} = 4 \times 5 = 20 \text{ milliseconds}$✓

$$\text{Frequency} = \frac{1}{\text{Period}} = \frac{1}{20 \times 10^{-3}} \checkmark = 50 \text{ Hz} \checkmark$$

(3)
[15]

QUESTION 3

3.1 $P_{in} = \frac{V^2}{R}$

$P_{in} = \frac{(800 \times 10^{-3})^2}{150}$ ✓

$P_{in} = \frac{0{,}64}{150}$ ✓

$P_{in} =$ 0,004267 W✓ **OR** 4,267 mW (3)

3.2 $P_{out} = I_o{}^2 R$

$P_{out} = (2)^2$✓ $\times 8$✓

$P_{out} = 32$ W✓ (3)

3.3 $N = 10\log\frac{P_{out}}{P_{in}}$

$N = 10\log\frac{32}{0{,}00427}$ ✓✓

$N = 10\log 7494{,}145$ ✓

$N =$ 38,747 dB✓ **OR** $N =$ 38,750 dB (4)

[10]

QUESTION 4

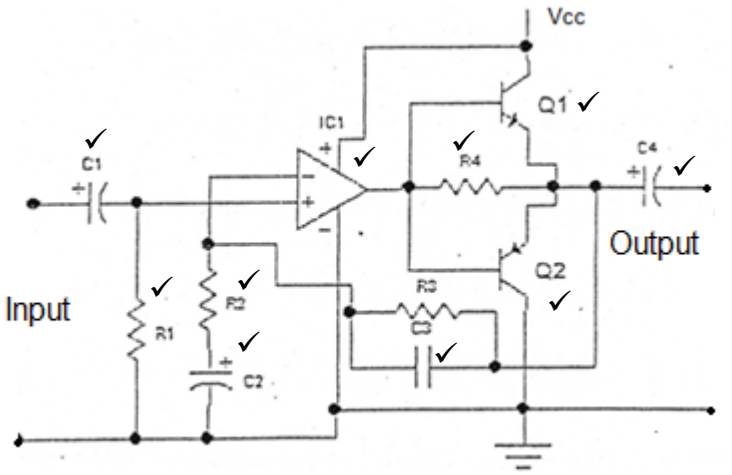

[10]

QUESTION 5

5.1

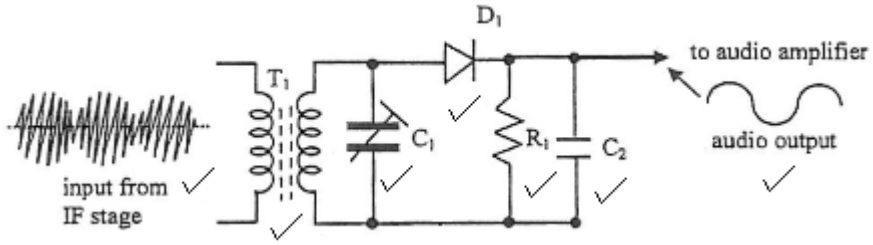

(7)

5.2 A discriminator changes the frequency variations into amplitude variations✓ to separate the AF ✓from the RF carrier wave.✓ (3)

5.3 An IF amplifier is tuned to pass only the IF signal✓ and amplify it✓ while rejecting all other frequencies.✓ (3)

5.4 A limiter clips the top and bottom of the RF wave✓ removing any interference which appears as noise, thus avoiding distortion.✓ (2)

[15]

QUESTION 6

6.1

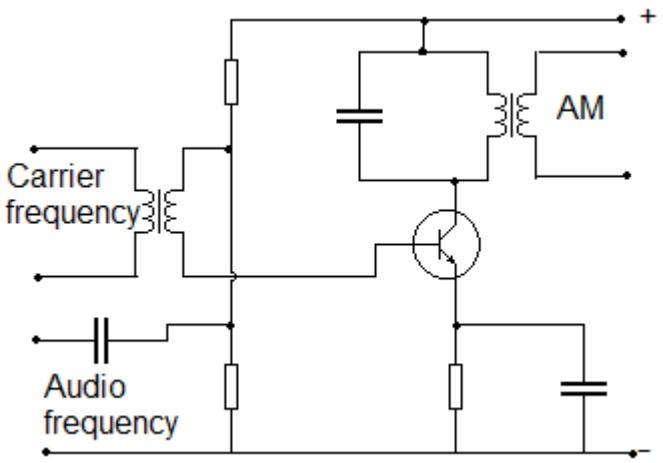

(½ for each component and label = 14/2) (7)

6.2
- Amateur radio operators
- Citizen band radios
- Military radios (communication) (3)

[10]

QUESTION 7

7.1 Time-division multiplexing can be done by sending signals at different time intervals✓ over a single transmission line.✓ (2)

7.2 The position of the pulses is varied✓ in accordance with the signal to be transmitted.✓ (2)

7.3 The modulator is employed on the transmission side.✓ It converts digital data to FSK.✓ The demodulator is applied on the receiver side.✓ It converts the FSK back to digital data.✓ (2 + 2) (4)

7.4 Digital/Five-unit code (2)

[10]

QUESTION 8

8.1
- Advantage: wide bandwidth
- Disadvantage: low gain (2)

8.2 Critical frequency is the highest frequency beamed vertically upwards✓ at the ionosphere that will still be returned to earth.✓ Frequencies higher than this critical frequency will go through the ionosphere✓ and become lost in space.✓ (4)

8.3 8.3.1 The signal travels around the surface of the earth through diffraction.

8.3.2 The wave travels directly from the transmitting to the receiving antenna without the need for reflection or refraction.

(2 × 2) (4)
[10]

QUESTION 9

9.1
- Pressure of pinch roller against tape and capstan
- Deformation of pinch roller and capstan
- Stretched rubber belt
- Positive tension due to take-up spool
- Negative tension or drag due to unspooling and friction across the head
- Unbalanced drive motor (Any 5 × 1) (5)

9.2
- Larger output signal swing
- Very little distortion
- Good signal-to-noise ratio (3)

9.3
- Wow: slow variation of tape speed
- Flutter: fast variation of tape speed (2)

[10]

TOTAL: 100

Copyright reserved