higher education & training

Department:
Higher Education and Training
REPUBLIC OF SOUTH AFRICA

NATIONAL CERTIFICATE

PLATING AND STRUCTURAL STEEL DRAWING N3

(8090113)

16 November 2022 (X-paper)
09:00–13:00

Requirements: ONE A2 drawing paper.

Drawing instruments and nonprogrammable calculators may be used.

This question paper consists of 7 pages.

056Q1E2216

Copyright reserved

DEPARTMENT OF HIGHER EDUCATION AND TRAINING
REPUBLIC OF SOUTH AFRICA

NATIONAL CERTIFICATE
PLATING AND STRUCTURAL STEEL DRAWING N3
TIME: 4 HOURS
MARKS: 100

INSTRUCTIONS AND INFORMATION

1. QUESTION 1 is compulsory.
2. Answer any THREE questions from QUESTION 2 to QUESTION 5.
3. Number the answers according to the numbering system used in this question paper.
4. Show all construction lines on all the drawings.
5. ONE A2 DRAWING SHEET should be used.
6. Draw on both sides of the A2 DRAWING SHEET.
7. Write neatly and legibly.

Copyright reserved

QUESTION 1

FIGURE 1, below, shows two views of a square to round transition piece.

Use scale 1:1 and draw the following:

1.1 The given views. (2)

1.2 Calculate the true lengths (show all calculation on the DRAWING SHEET). (12)

1.3 Use the information from QUESTION 1.2 above and develop half pattern of the transition piece. Open the development on the line marked X–C. (8)

Note: No marks will be awarded for true lengths taken from the drawing to scale.

Marks will be allocated for:

Linework	1	
Accuracy	2	(3)

[25]

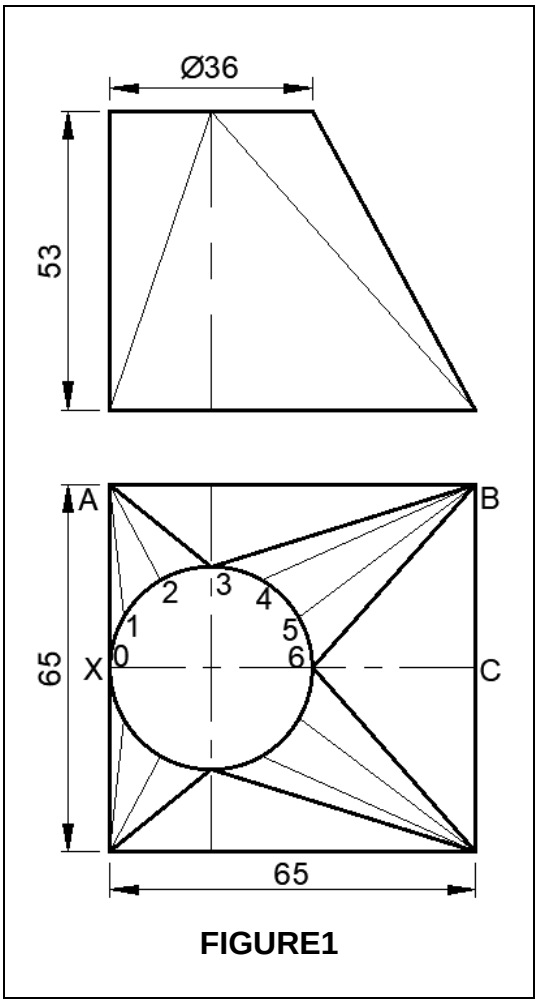

FIGURE1

Copyright reserved

QUESTION 2

FIGURE 2, below, shows a two-way breech piece used in ventilation system. The top view of the breech pieces is symmetrical about horizontal centreline.

Use scale 1:10 and draw the following:

2.1 The given views. (9)

2.2 Develop the shape of the plate required to form leg A. Open the development on the line marked X–X. (12)

Marks will be allocated for:

Linework	2
Accuracy	2

(4)
[25]

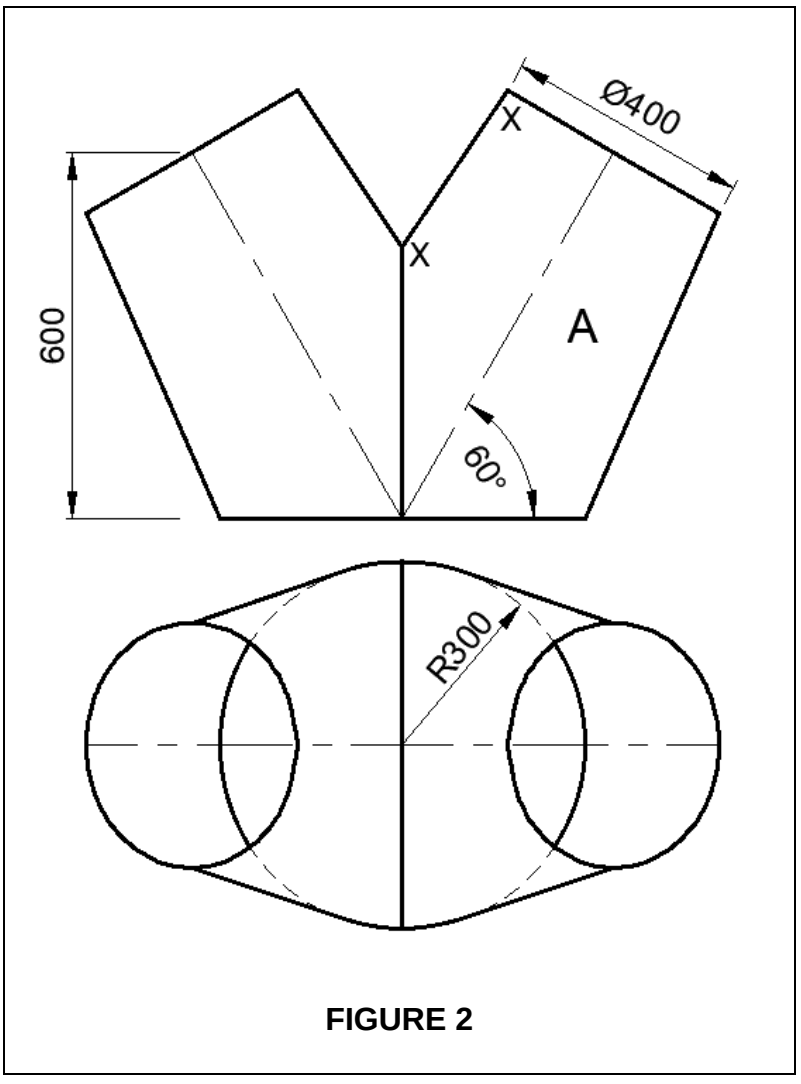

FIGURE 2

Copyright reserved

QUESTON 3

FIGURE 3 below, shows an oblique conical hopper fitting on a cylindrical duct.
NB: The hidden details on the front view are not shown in lieu of QUESTION 3.2.

Use scale 1:1 and draw the following:

3.1 The given views. (5)

3.2 Determine the line of interpenetration showing all construction lines. (5)

3.3 Develop the pattern of the plate to manufacture the conical hopper. Open the development on the shorter side. (10)

Marks will be allocated for:

Linework	2
Accuracy	3

(5)
[25]

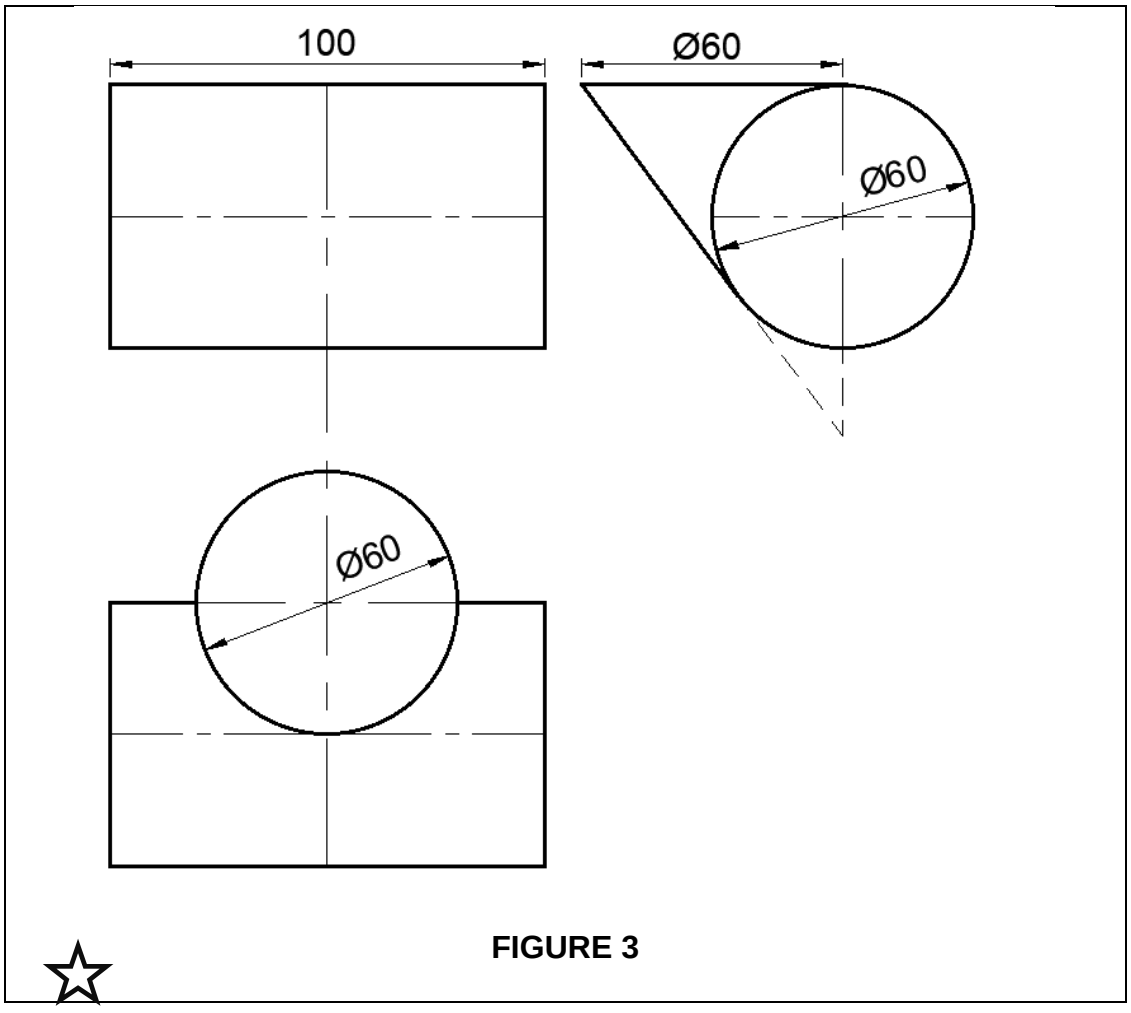

FIGURE 3

Copyright reserved

QUESTION 4

FIGURE 4 below, shows the front and the side view of a cone frustrum with an off-set branch pipe.

Use scale 1:1 and draw the following:

4.1 The given views. (4)

4.2 The top view including the interpenetration lines between the cone and the pipe. (6)

4.3 The interpenetration lines between the cone and the pipe on the front view. (4)

4.4 Develop the pattern of the branch pipe. Open the development on the line marked X–X. (8)

Marks will be allocated for:

Linework	2
Accuracy	1

(3)
[25]

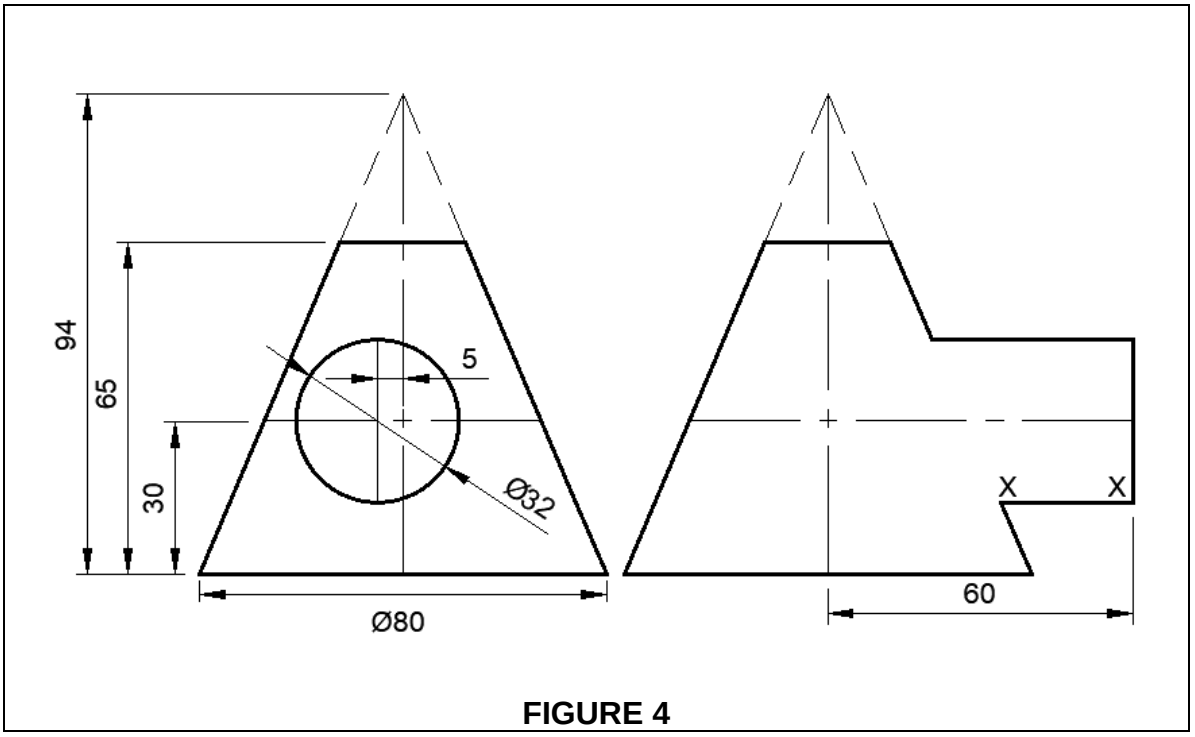

FIGURE 4

Copyright reserved

QUESTION 5

FIGURE 5, below, shows the front view of a welded steel connection that consist of the following parts:

Item A	RSJ	265 × 250 × 15 mm	1 of
Item B	Gusset plates	15 mm thick shaped gussets plates	2 of
Item C	RSC	265 × 90 × 15 mm	1 of

Use scale 1:5 and draw the following in the first angle orthographic projection:

5.1 The front view. (3)

5.2 The top view. (9)

5.3 The left view. (8)

Marks will be allocated for:

Linework	3
Accuracy	2

(5)
[25]

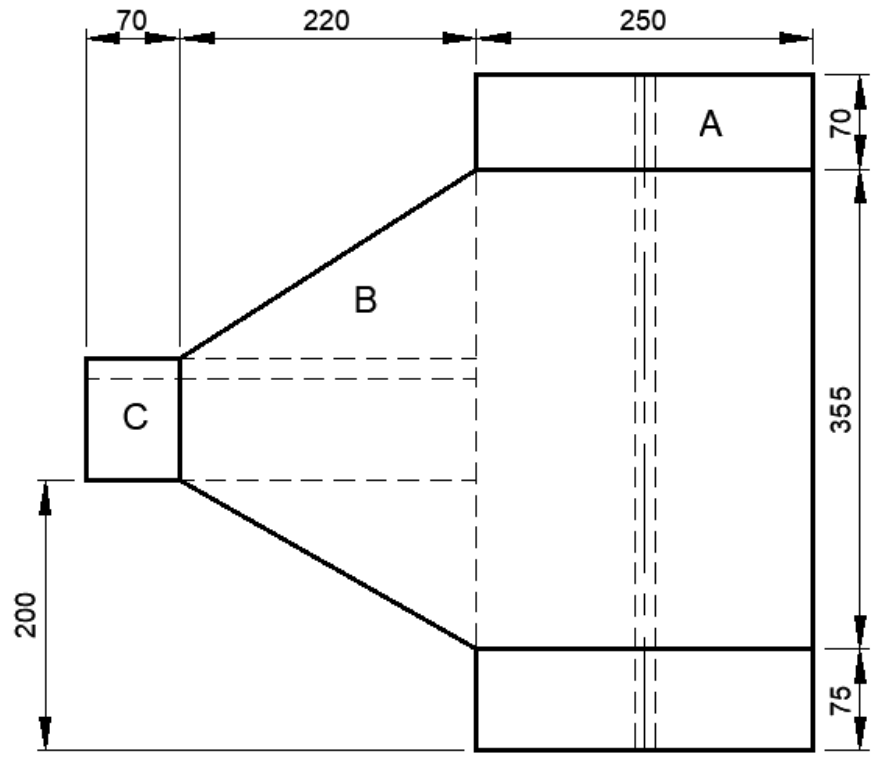

FIGURE 5

TOTAL: 100

Copyright reserved