higher education & training

Department:
Higher Education and Training
REPUBLIC OF SOUTH AFRICA

# MARKING GUIDELINE

## NATIONAL CERTIFICATE

## PLATING AND STRUCTURAL STEEL DRAWING N3

**16 November 2022**

**This marking guideline consists of 8 pages.**

**NOTE: THIS MARKING GUIDELINE SHOULD BE USED AS A REFERENCE FOR MARKING ONLY AS THE DRAWINGS HAVE NOT BEEN DONE TO SCALE.**

Copyright reserved

## QUESTION 1: CALCULATIONS

1. $Arc\ lenght = \frac{\pi D}{12}$
$= \frac{\pi \times 36}{12}$ √
$= 9.42\ mm$ √

2. $X - 0 = \sqrt{0^2 + 53^2}$
$= 53\ mm$ √

3. $0 - A = \sqrt{32..5^2 + 53^2}$
$= 62.17\ mm$ √

4. $A - 1 = \sqrt{2.4^2 + 23.5^2 + 53^2}$
$= 58.03\ mm$ √

5. $A - 2 = \sqrt{16.9^2 + 9^2 + 53^2}$
$= 56.35\ mm$ √

6. $A - 3 = \sqrt{18^2 + 14.5^2 + 53^2}$
$= 57.82\ mm$ √

7. $B - 3 = \sqrt{47^2 + 14.5^2 + 53^2}$
$= 72.31\ mm$ √

8. $B - 4 = \sqrt{16.9^2 + 38^2 + 53^2}$
$= 67.36\ mm$ √

9. $B - 5 = \sqrt{23.5^2 + 31.4^2 + 53^2}$
$= 65.93\ mm$ √

10. $B - 6 = \sqrt{32.5^2 + 29^2 + 53^2}$
$= 68.6\ mm$ √

11. $C - 6 = \sqrt{32.5^2 + 53^2}$
$= 62.17\ mm$ √

Copyright reserved 

**QUESTION 1**

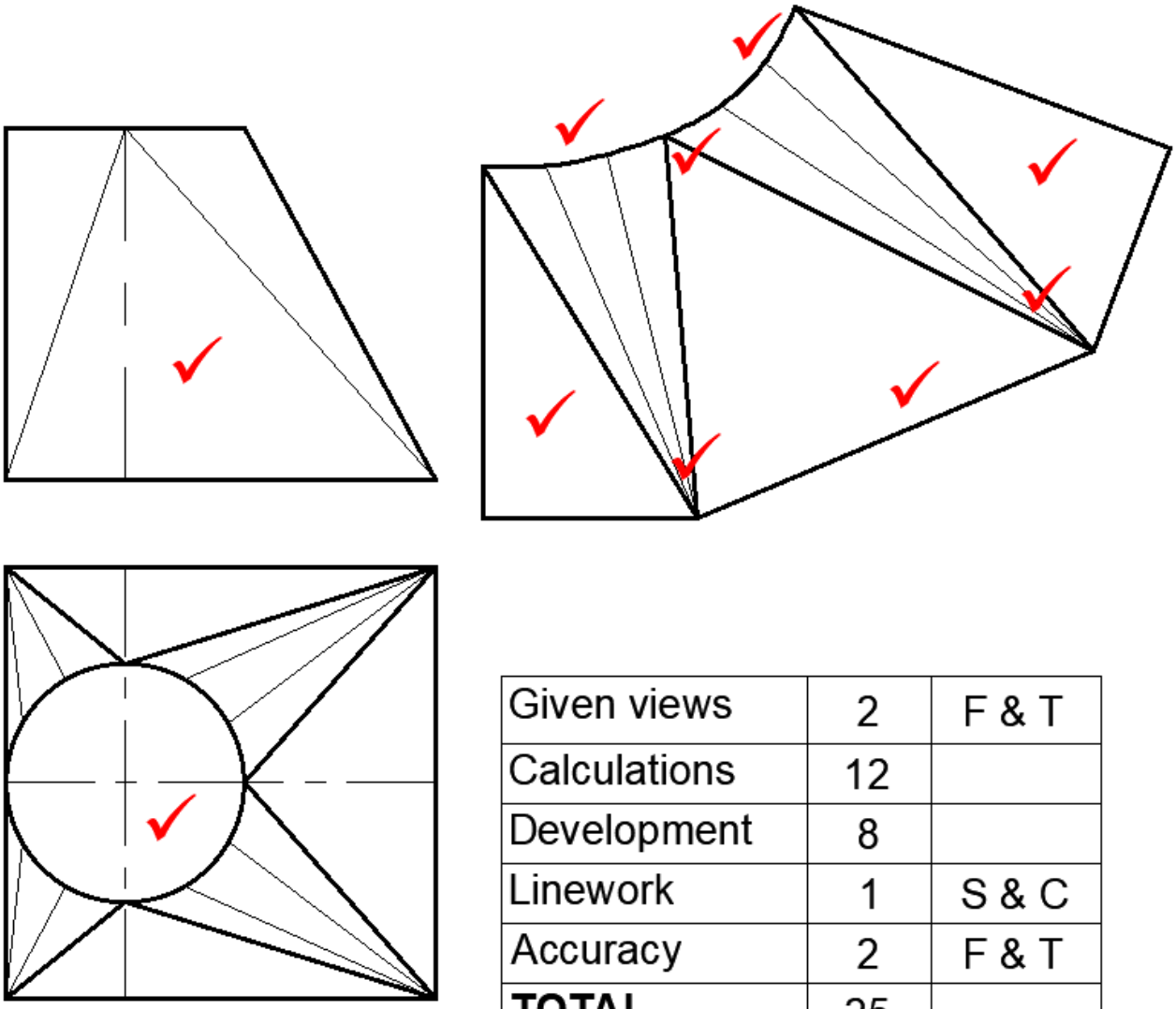

| | | |
|---|---|---|
| Given views | 2 | F & T |
| Calculations | 12 | |
| Development | 8 | |
| Linework | 1 | S & C |
| Accuracy | 2 | F & T |
| **TOTAL** | 25 | |

**FIGURE 1**

**QUESTION 2**

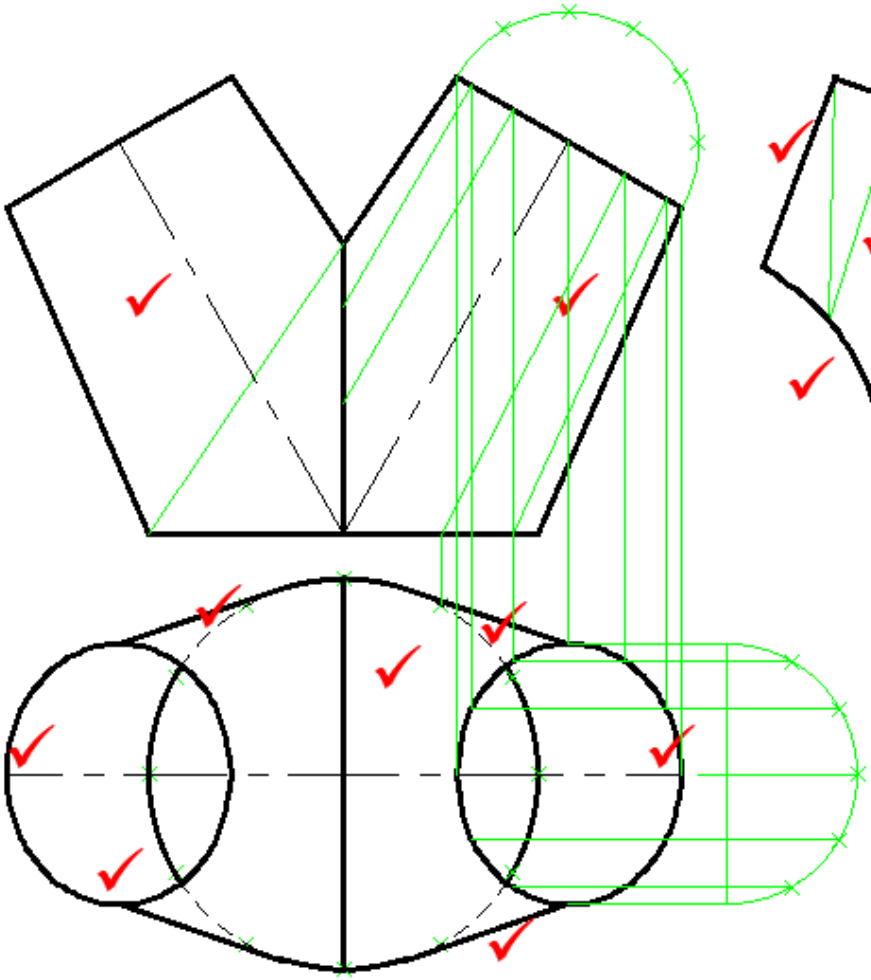

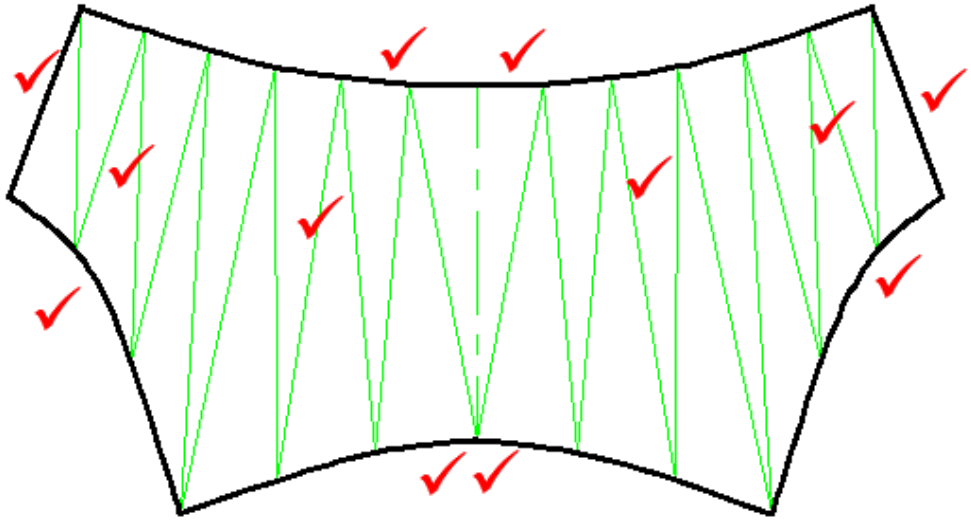

| | | |
|---|---|---|
| Given views | 9 | |
| Development | 12 | |
| Linework | 2 | S&D |
| Accuracy | 2 | F & T |
| TOTAL | 25 | |

Copyright reserved

**QUESTION 3**

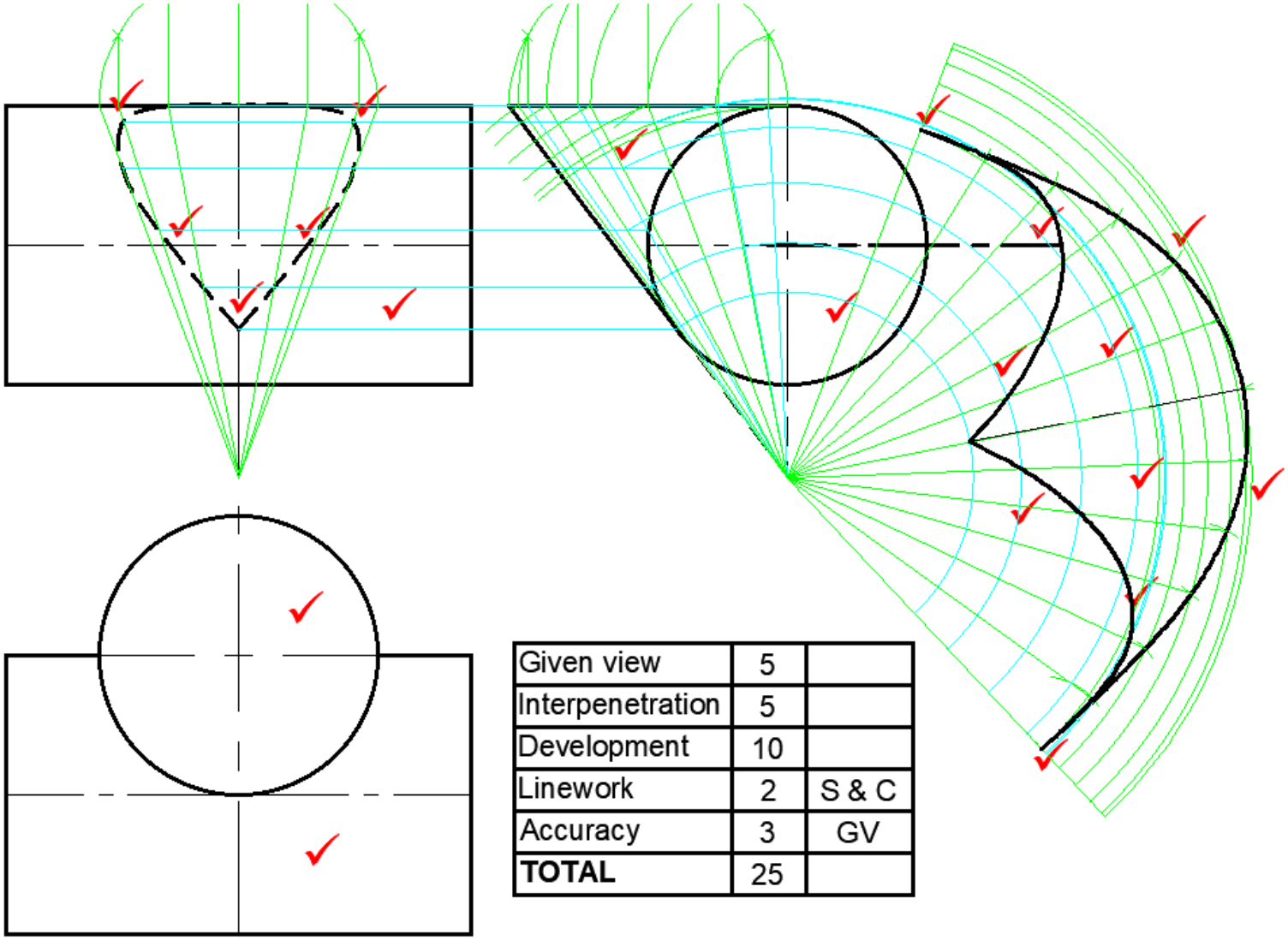

| | | |
|---|---|---|
| Given view | 5 | |
| Interpenetration | 5 | |
| Development | 10 | |
| Linework | 2 | S & C |
| Accuracy | 3 | GV |
| **TOTAL** | 25 | |

Copyright reserved

## QUESTION 4

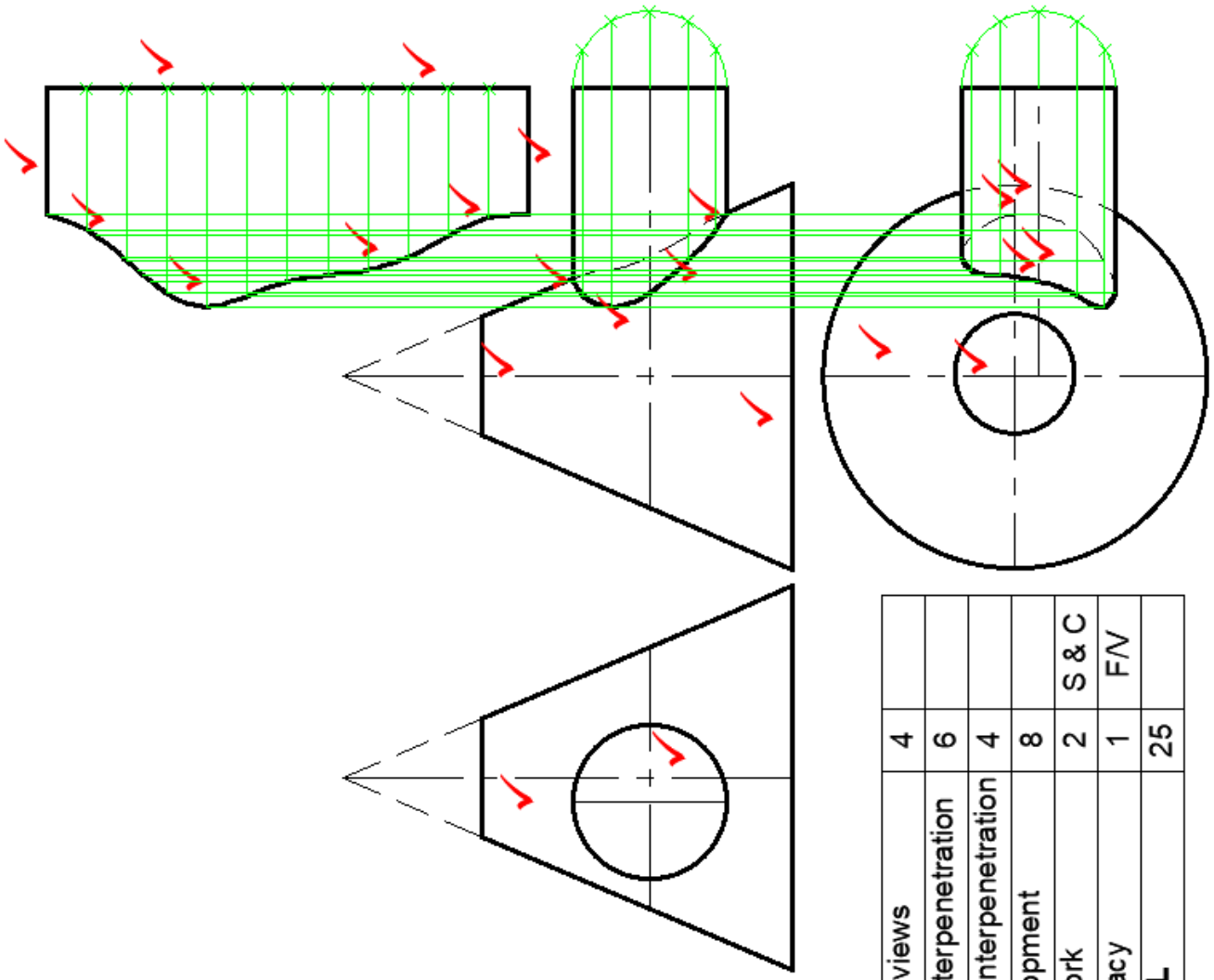

| | | | |
|---|---|---|---|
| Given views | 4 | | |
| Top interpenetration | 6 | | |
| Cone interpenetration | 4 | | |
| Development | 8 | | |
| Linework | 2 | S & C | |
| Accuracy | 1 | F/V | |
| **TOTAL** | 25 | | |

**QUESTION 5**

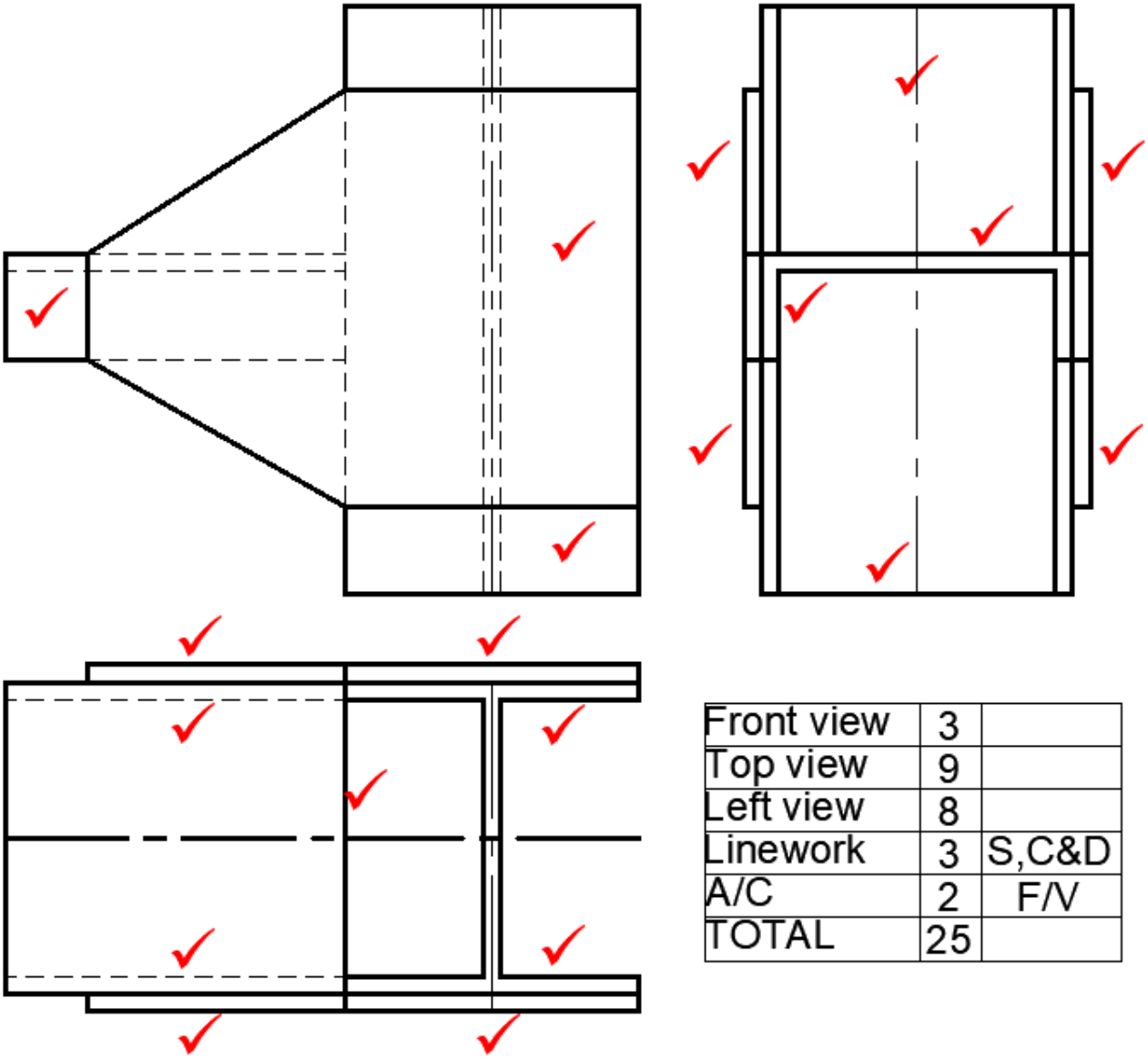

| | | |
|---|---|---|
| Front view | 3 | |
| Top view | 9 | |
| Left view | 8 | |
| Linework | 3 | S,C&D |
| A/C | 2 | F/V |
| TOTAL | 25 | |

**TOTAL: 100**

Copyright reserved