higher education & training

Department:
Higher Education and Training
REPUBLIC OF SOUTH AFRICA

NATIONAL CERTIFICATE

PLATING AND STRUCTURAL STEEL DRAWING N3

(8090113)

22 November 2023 (X-paper)
09:00–13:00

REQUIREMENTS: A2 drawing paper

Drawing instruments and nonprogrammable calculators may be used.

This question paper consists of 7 pages.

054Q1E2322

Copyright reserved

DEPARTMENT OF HIGHER EDUCATION AND TRAINING
REPUBLIC OF SOUTH AFRICA

NATIONAL CERTIFICATE
PLATING AND STRUCTURAL STEEL DRAWING N3
TIME: 4 HOURS
MARKS: 100

NOTE: If you answer more than the required number of questions, only the required number of questions will be marked. All work you do not want to be marked, must be clearly crossed out.

INSTRUCTIONS AND INFORMATION

1. QUESTION 1 is COMPULSORY.
2. Answer any THREE questions from QUESTION 2 to QUESTION 5.
3. Read all the questions carefully.
4. Number the answers according to the numbering system used in this question paper.
5. Show all construction lines on all the questions.
6. ONE A2 DRAWING PAPER should be used.
7. Draw on both sides of the A2 DRAWING PAPER.
8. Use only a black or a blue pen, to write your personal information.
9. All drawings must be done in pencil.
10. Write neatly and legibly.

Copyright reserved

QUESTION 1 (COMPULSORY)

FIGURE 1 below shows two views of a twisted square-to-square transition piece.

1.1 Use a scale of 1:10 and draw the given view. (3)

1.2 Calculate the true lengths, showing all calculations on the drawing paper. (12)

1.3 Use the information from QUESTION 1.2 above and develop the pattern of a twisted square-to-square transition piece. Open the development on the line marked 'X−X. (9)

NOTE: No marks will be awarded for true lengths taken from the drawing to scale.

Marks will also be allocated for:

Accuracy	1

(1)
[25]

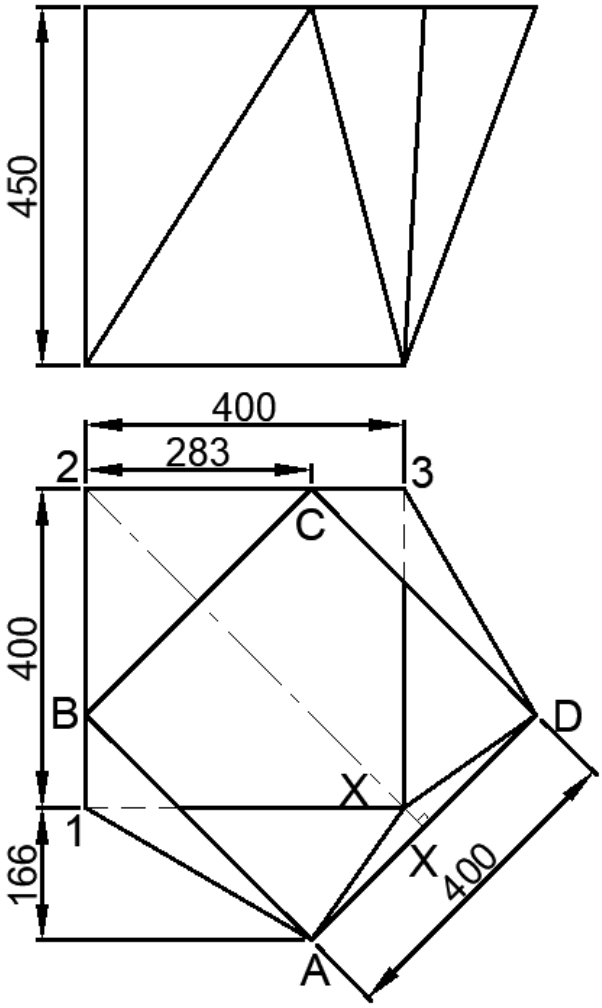

FIGURE 1

QUESTION 2

FIGURE 2 below, shows two views of a ventilator head that fits on a rectangular head duct.

Use a scale of 1:10 and complete the following:

2.1	Draw the side view.	(1)
2.2	Draw the front view.	(3)
2.3	Draw the top view.	(4)
2.4	Develop the pattern for the panel A.	(5)
2.5	Develop the pattern for the panel B.	(5)
2.6	Develop the pattern for the panel C.	(5)

Marks will also be allocated for:

Accuracy	2

(2)
[25]

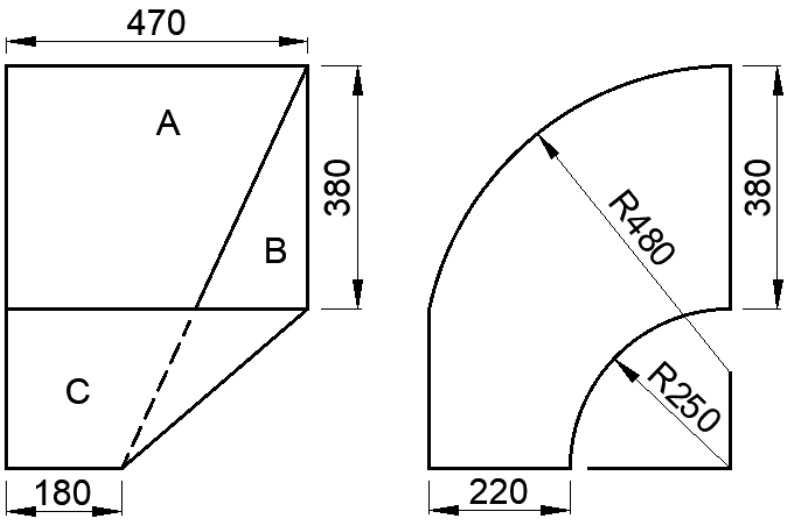

FIGURE 2

QUESTION 3

FIGURE 3 below, shows the front view of a right conical connection to a right conical cover.

Use a scale of 1:10 and complete the following:

3.1 Draw the given view. (3)

3.2 Draw a top view, showing the interpenetration line of the half shape between the right conical top and the right conical cover. (5)

3.3 Draw the front view, showing the interpenetration line by construction. (4)

3.4 Develop the pattern for the right conical cover. Open the development on the line marked 'X–X'. (9)

Marks will also be allocated for:

Linework	2
Accuracy	2

(4)
[25]

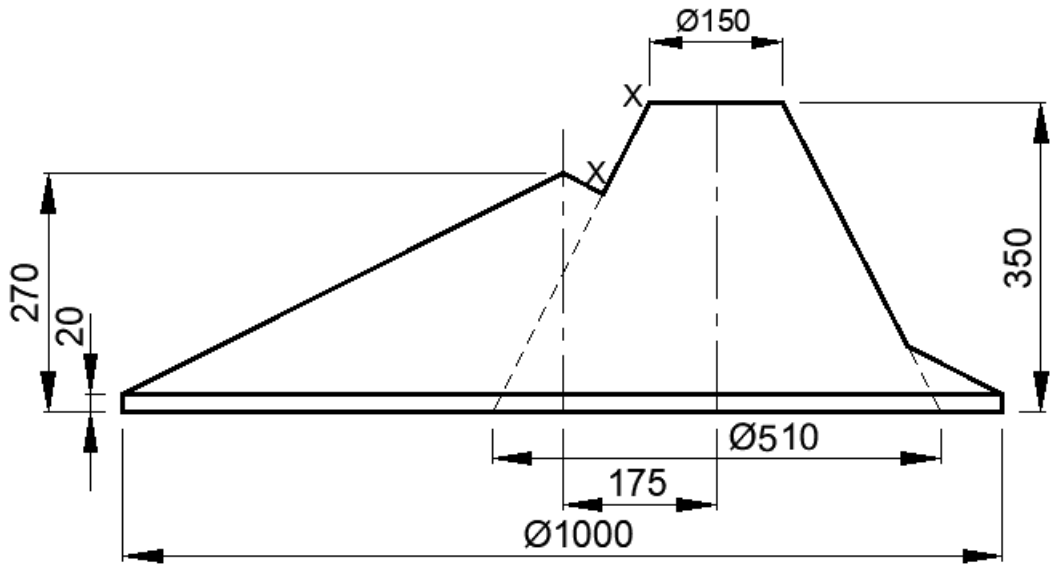

FIGURE 3

QUESTION 4

FIGURE 4 below, shows two views of a hopper used as a model at TVET colleges.

Use a scale of 1:5 and complete the following:

4.1 Draw the given views. (4)

4.2 Develop a template for the kink and indicate the angle in degree. (5)

4.3 Develop the shape of the plate required to make the hopper. Open the development on the line marked 'X–X'. (14)

Marks will also be allocated for:

Accuracy	2

(2)
[25]

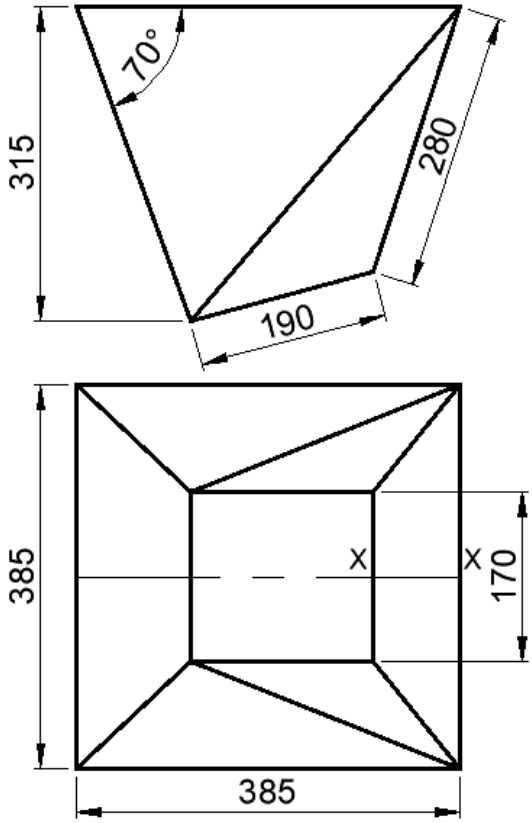

FIGURE 4

QUESTION 5

FIGURE 5 below, shows an Oblique Tee-Piece consisting of two unequal pipes.

Use a scale of 1:5 and draw the following:

5.1 The given views. (6)

5.2 Determine the interpenetration line by construction. (4)

5.3 Determine the shape of the hole in the main. (5)

5.4 Develop the pattern of the plate to make the branch pipe. Open the development on the line marked 'X–X'. (8)

Marks will be allocated for:

Accuracy	2

(2)
[25]

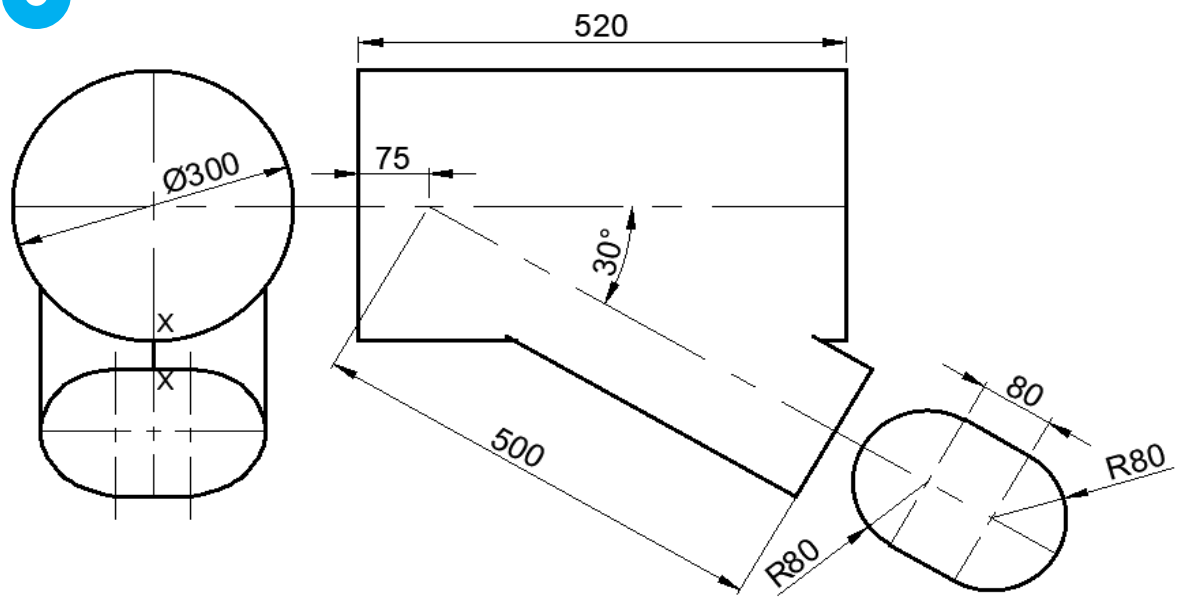

FIGURE 5

TOTAL: 100

Copyright reserved