higher education & training

Department:
Higher Education and Training
REPUBLIC OF SOUTH AFRICA

NASIENRIGLYN

NASIONALE SERTIFIKAAT

PLAATWERK- EN BOUSTAALTEKENE N3

22 November 2023

Hierdie nasienriglyn bestaan uit 7 bladsye.

Kopiereg voorbehou

VRAAG 1: BEREKENING

1. $A - X/X - D = \sqrt{(166)^2 + (117)^2 + (450)^2}$✓✓
$= 493.71$ mm✓

2. $X - X = \sqrt{(493.71)^2 - (200)^2}$✓
$= 451.38$ mm✓

3. $D - 3/A - 1 = \sqrt{(283)^2 + (166)^2 + (450)^2}$✓✓
$= 556.91$ mm✓

4. $C - 3/B - 1 = \sqrt{(117)^2 + (450)^2}$✓
$= 465$ mm✓

5. $C - 2/B - 2 = \sqrt{(283)^2 + (450)^2}$✓
$= 531.59$ mm✓

VRAAG 1

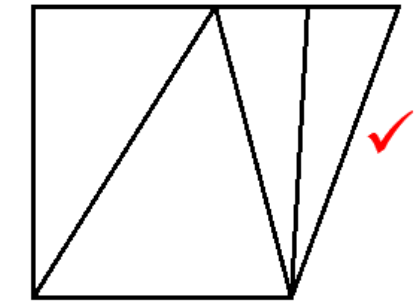

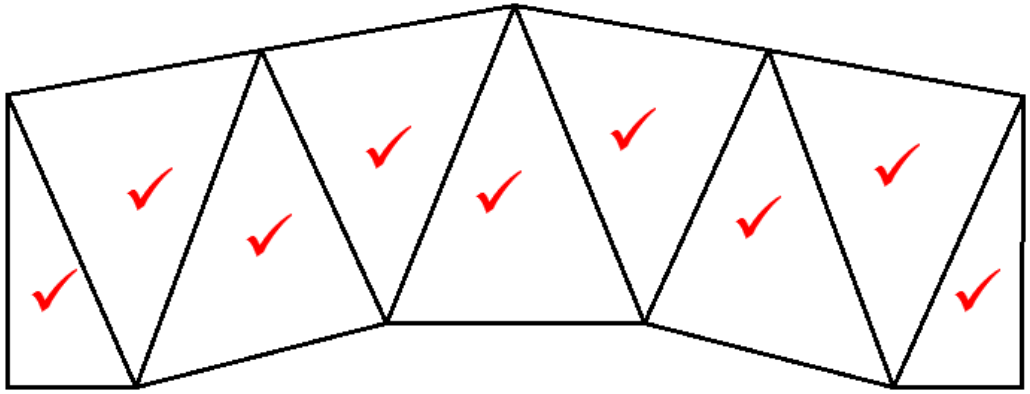

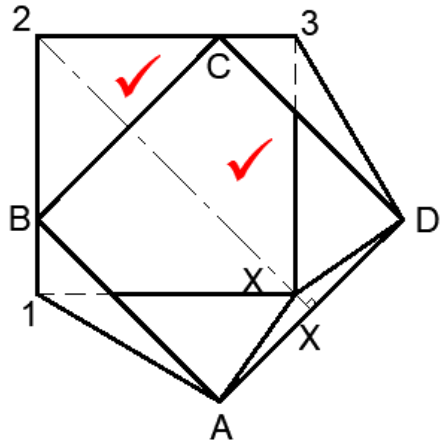

A-X/X-D	493.71	3
X-X	451.38	2
D-3/A-1	556.91	3
C-3/B-1	465	2
C-2/B-2	531.59	2
TOTAL		12

Given view	3	
Calculation	12	Given views
Development	9	
Accuracy	1	T & F view
TOTAL	25	

VRAAG 2

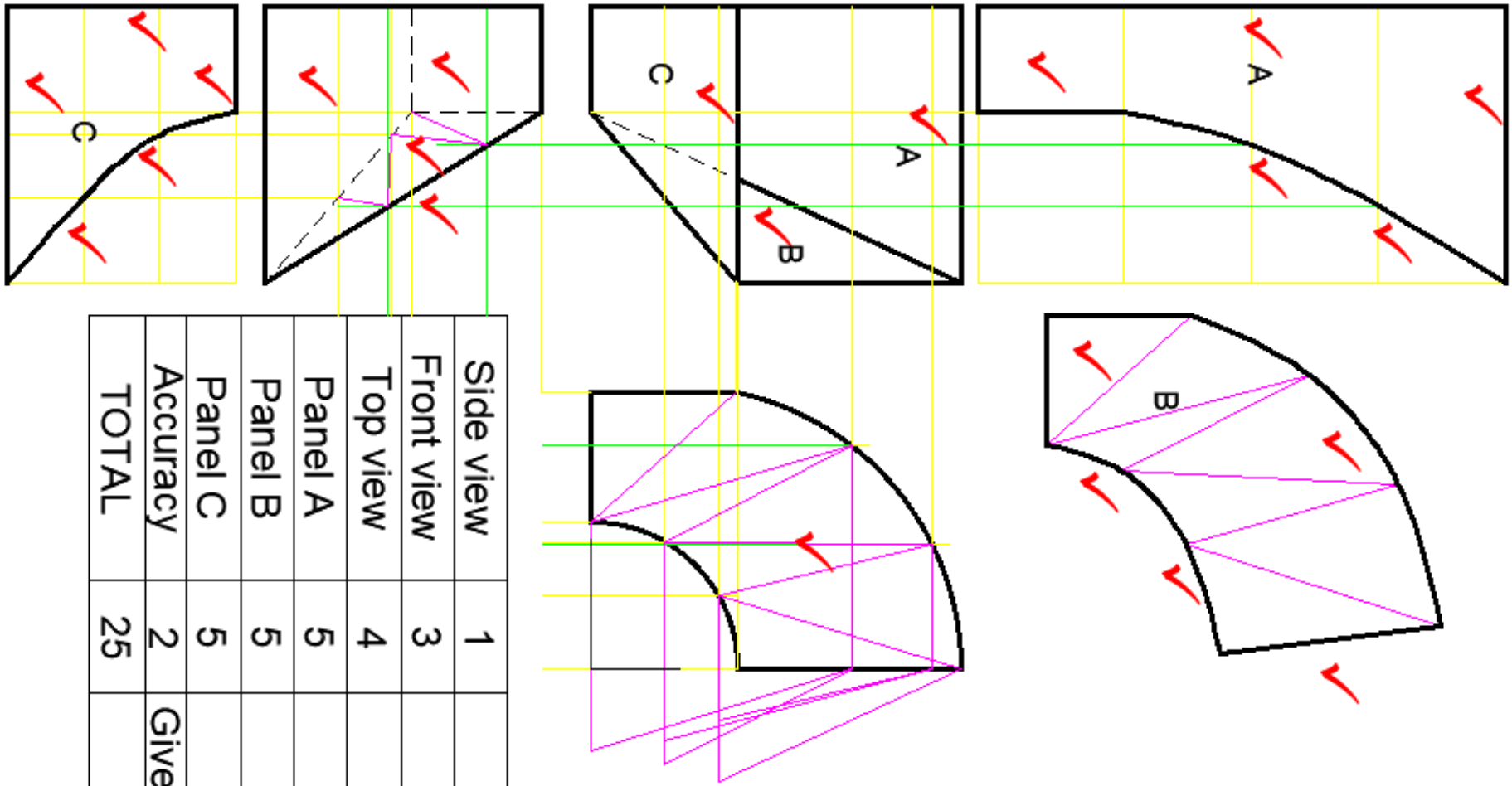

Side view	1
Front view	3
Top view	4
Panel A	5
Panel B	5
Panel C	5
Accuracy	2
TOTAL	25

Given views

VRAAG 3

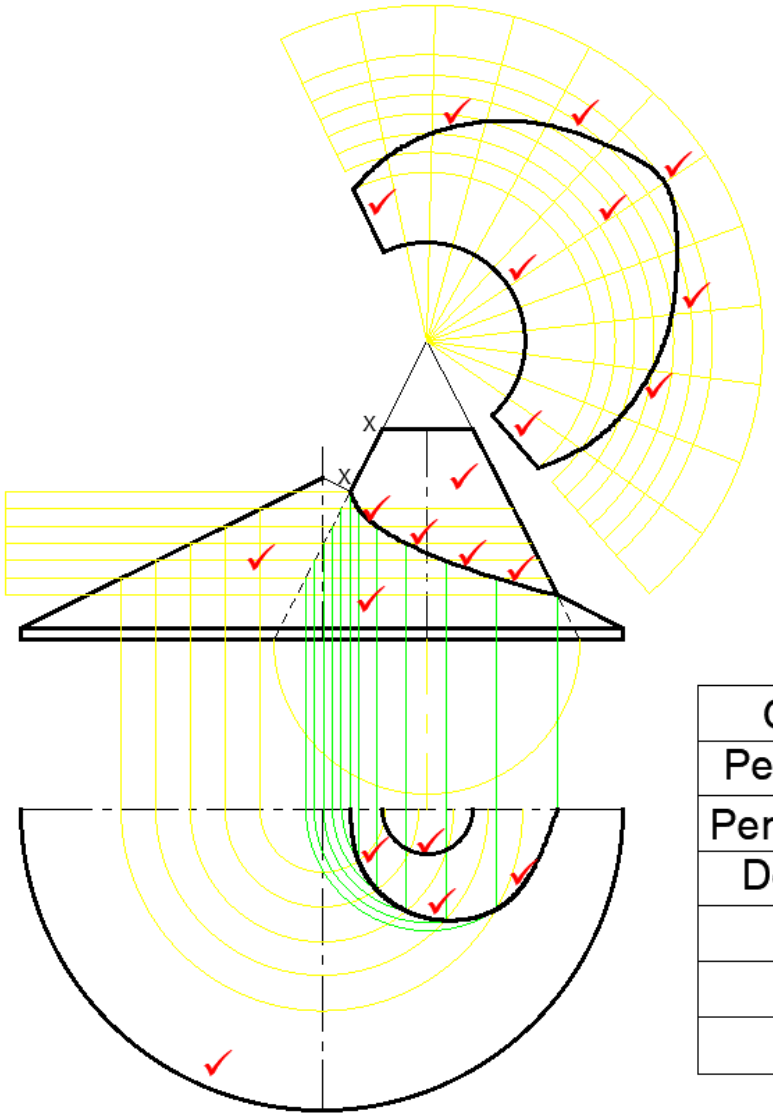

Given view	3	
Penetration top	5	
Penetration front	4	
Development	9	
Linework	2	S & D lines
Accuracy	2	Given view
TOTAL	25	

Kopiereg voorbehou
Blaai om asseblief

VRAAG 4

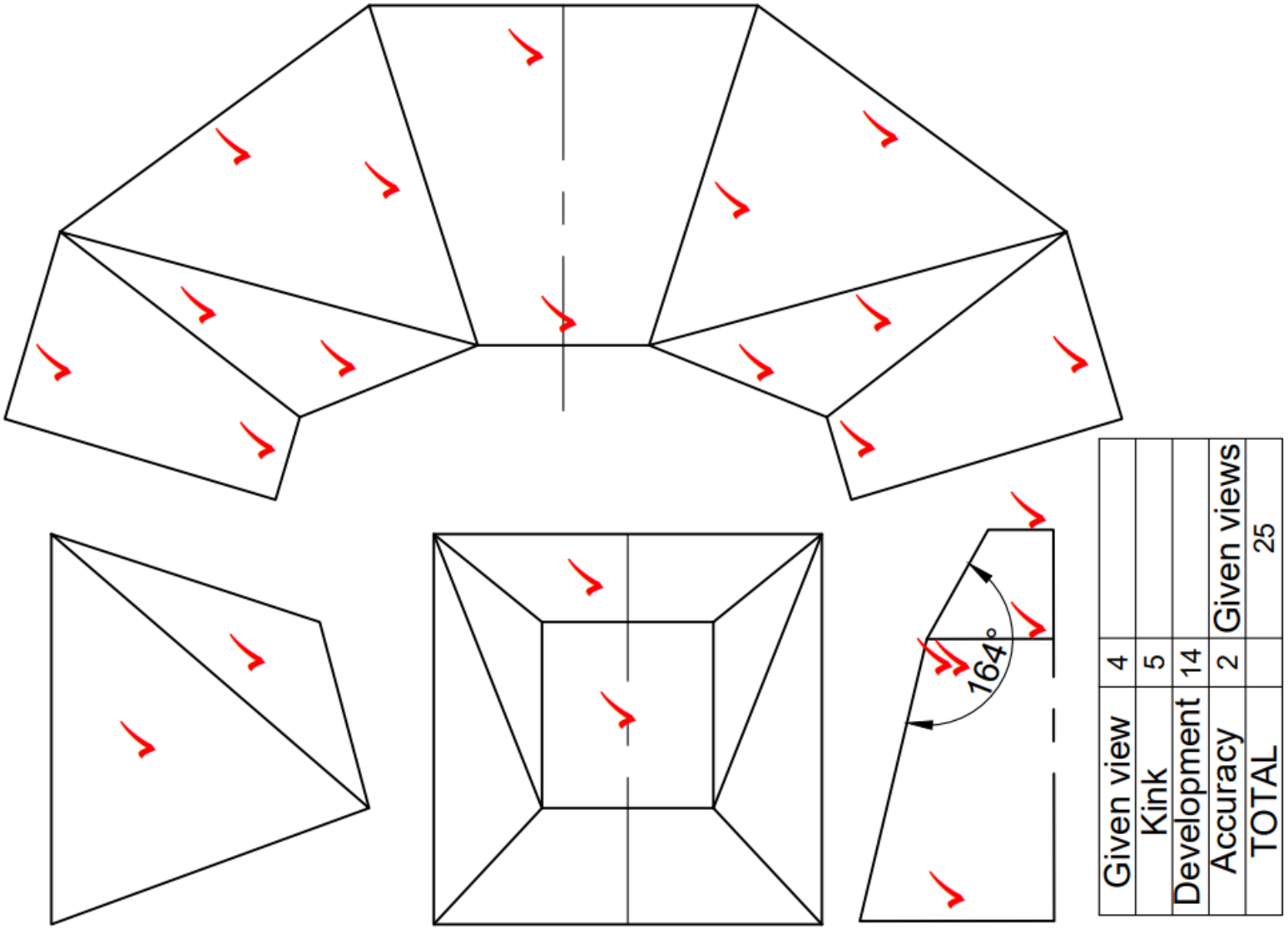
164°
Given view 4
Kink 5
Development 14
Accuracy 2
TOTAL
Given views 25

VRAAG 5

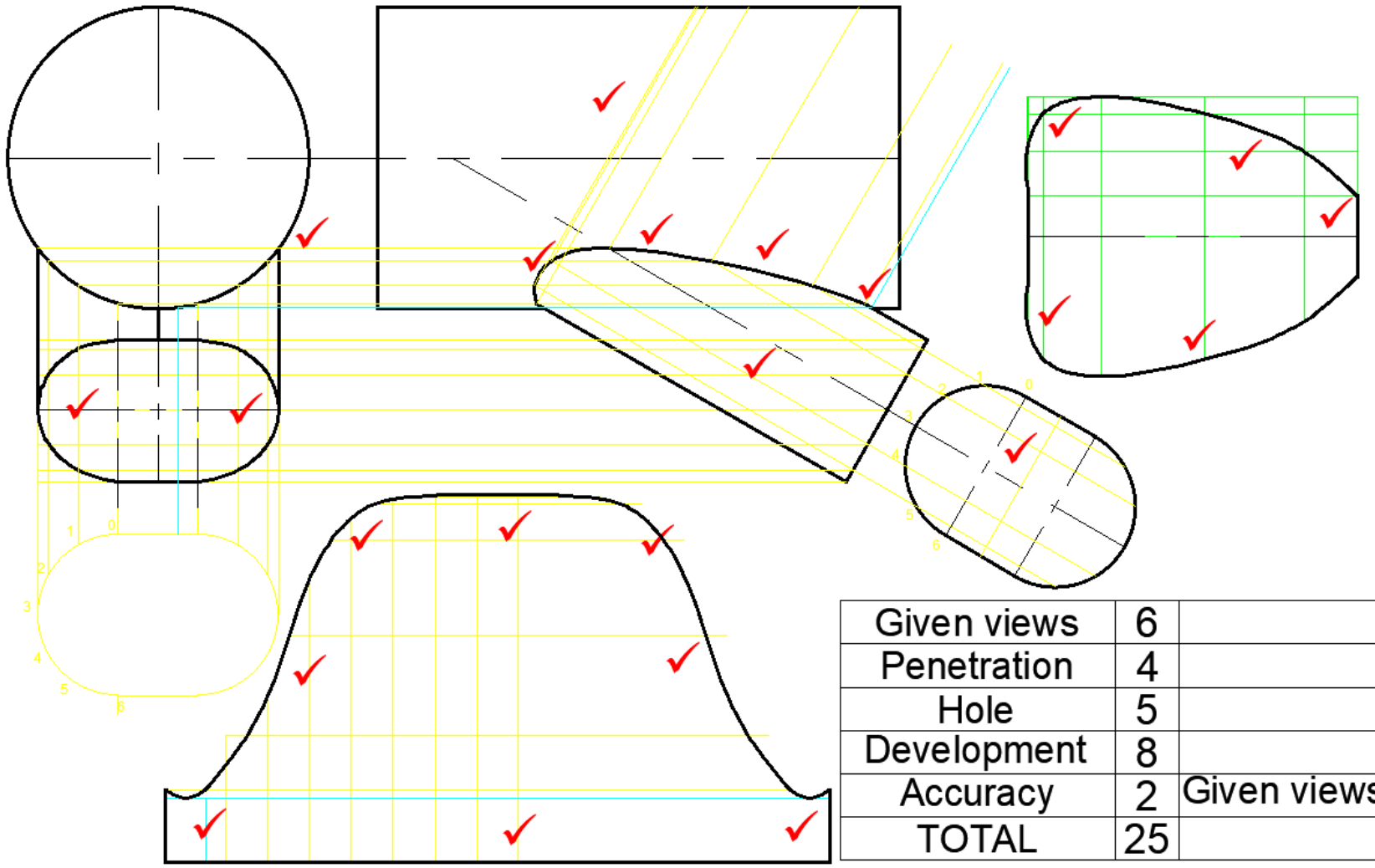

Given views	6	
Penetration	4	
Hole	5	
Development	8	
Accuracy	2	Given views
TOTAL	25	

Kopiereg voorbehou