higher education & training

Department:
Higher Education and Training
REPUBLIC OF SOUTH AFRICA

NATIONAL CERTIFICATE

MECHANOTECHNOLOGY N3

(8190373)

22 November 2022 (X-paper)
09:00–12:00

This question paper consists of 6 pages, 2 tables and 1 diagram sheet.

140Q1E2222

Copyright reserved

DEPARTMENT OF HIGHER EDUCATION AND TRAINING
REPUBLIC OF SOUTH AFRICA

NATIONAL CERTIFICATE
MECHANOTECHNOLOGY N3
TIME: 3 HOURS
MARKS: 100

INSTRUCTIONS AND INFORMATION

1. Answer all the questions.
2. Read all the questions carefully.
3. Number the answers according to the numbering system used in this question paper.
4. Start each section on a new page.
5. Use only a black or a blue pen.
6. Write neatly and legibly.

Copyright reserved

QUESTION 1: POWER TRANSMISSION, COUPLING OF SHAFTS AND CLUTCHES

1.1 A wedge belt drive of a 55 kW electric motor runs at 1 200 r/min to a conveyor belt running at 750 r/min. The drive is 'light duty'. The approximate centre distance is 2 000 mm over a duty of 11 hours per day. The shaft driving the motor has an 80 mm diameter and the shaft driving the conveyor is 90 mm. the start is heavy-duty (direct).

Analyse the above statement and determine the following:

1.1.1 Speed ratio (2)

1.1.2 Service factor (2)

1.1.3 Design Power (2)

1.1.4 The minimum pulley diameter (2)

1.2 When positioning an idler sprocket, there are factors to be considered. State SIX of these factors. (6)

1.3 Name THREE categories of fast couplings. (3)

1.4 Name THREE types of friction clutches. (3)
[20]

QUESTION 2: BRAKES

2.1 FIGURE 1 below shows a sketch of a brake system. Name the brake system shown. (1)

2.2 Name the parts indicated in the FIGURE 1 by writing only the answer next to the letter (A–D) in the ANSWER BOOK.

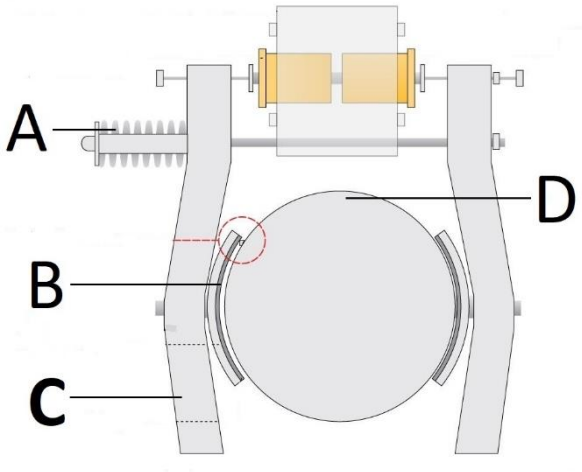

FIGURE 1

(4)
[5]

QUESTION 3: BEARINGS

3.1 FIGURE 2 below shows two anti-friction bearings. Name the TWO anti-friction bearings shown. (2)

3.2 Name the parts indicated in FIGURE 2 by writing only the answer next to the letter (A–D) in the ANSWER BOOK.

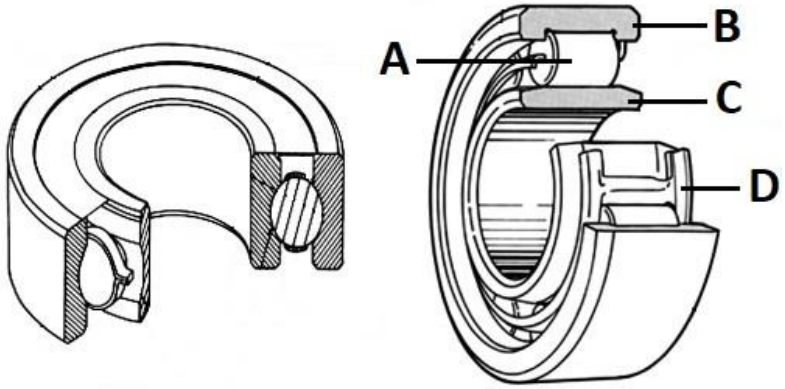

FIGURE 2 (4)

3.3 A bearing number consists of three figures. On each number, what does the first figure indicates? (1)

3.4 Briefly explain the working principle of an anti-friction bearing. (3)

[10]

QUESTION 4: WATER PUMPS, COOLING AND LUBRICATION

4.1 Indicate whether the following statements are TRUE or FALSE. Choose the answer and write only 'True' or 'False' next to the question number (4.1.1–4.1.6) in the ANSWER BOOK.

4.1.1 A reciprocating pump has THREE main moving elements. (1)

4.1.2 A plunger and a piston perform the same function. (1)

4.1.3 A piston in a water pump has packing rings inserted on the rim in order to prevent water leakage. (1)

4.1.4 Low pressure in a piping system is the cause for water hammer. (1)

4.1.5 If there is no vacuum in the pump system, then no suction of water can take place. (1)

4.2 Lubrication by mixing oil and petrol is one of the commonly known lubrication methods in the engineering field. Explain what happens when air-fuel ratio is incorrect in the following ways:

4.2.1 Too much oil (2)

4.2.2 Too little oil (2)

4.3 Name TWO types of air-cooling systems. (2)

4.4 State FOUR reasons for cooling a compressor. (4)
[15]

QUESTION 5: HYDRAULICS AND PNEUMATICS

5.1 State the main difference between a pneumatic system and a hydraulic system. (2)

5.2 Make a rough sketch of the following pneumatics symbols:

5.2.1 Pressure relief valve (2)

5.2.2 Adjustable control valve (2)

5.3 If the pressure in a hydraulic system is 0,9 MPa and the diameter of the plunger is 250 mm, calculate:

5.3.1 The cross sectional area of the plunger (2)

5.3.2 The force exerted by the plunger (2)
[10]

QUESTION 6: INTERNAL COMBUSTION ENGINE

6.1 State ONE function of a turbo in an engine. (1)

6.2 Name the FOUR different strokes of a petrol engine. (4)
[5]

Copyright reserved

QUESTION 7: CRANES AND LIFTING MACHINES

7.1 Choose a term from COLUMN B that matches a description that causes a steel rope to deteriorate in COLUMN A. Write only the letter (A–D) next to the question number (7.1.1–7.1.4) in the ANSWER BOOK.

COLUMN A		COLUMN B	
7.1.1	Accelerated wear	A	Broken core
7.1.2	Strand break	B	Incorrect handling
7.1.3	Corrosion	C	Sudden release of load
7.1.4	Bird cage	D	Insufficient lubrication
7.1.5.	Reduction in diameter	E	Shock load
		F	Worn sheaves

(5 × 1) (5)

7.2 There are THREE forces acting on a jib of a wharf crane. Name these THREE forces. (3)
[8]

QUESTION 8: MATERIALS AND MATERIAL PROCESSES

8.1 Name FOUR properties of metal. (4)

8.2 State THREE characteristics of thermoplastics. (3)
[7]

QUESTION 9: INDUSTRIAL ORGANISATION AND PLANNING

9.1 Within the production process of an organization, the budget is managed through various documents. Name FOUR of these documents. (4)

9.2 Briefly state FOUR limitations of downwards communication. (4)

9.3 Briefly discuss FOUR purposes of the Occupational Health and Safety Act (No. 15 of 1993). (4)
[12]

QUESTION 10: ENTREPRENEURSHIP

10.1 Explain the concept *entrepreneurship.* (4)

10.2 Name FOUR factors that will influence the location of a small business enterprise. (4)
[8]

TOTAL: 100

Copyright reserved

TABLE 1

SERVICE FACTORS FOR THE SELECTION OF WEDGE BELTS

	TYPES OF PRIME MOVERS					
	'Soft' starts			'Heavy' starts		
TYPES OF DRIVEN MACHINES	Hours per day duty			Hours per day duty		
	10 and under	**Over 10 to 16**	**Over 16**	**10 and under**	**Over 10 to 16**	**Over 16**
Class 1 – Light duty Blowers and fans Centrifugal compressors and pumps Belt conveyors (uniformly loaded)	1,0	1,1	1,2	1,1	1,2	1,3
Class 2 – Medium duty Blowers and fans Rotary compressors and pumps Belt conveyors (not uniformly loaded) Generators	1,1	1,2	1,3	1,2	1,3	1,4
Class 3 – Heavy duty Brick machinery Compressors and pumps (reciprocating) Conveyors (heavy duty) Hammer mills Punches and presses	1,2	1,3	1,4	1,4	1,5	1,6
Class 4 – Extra heavy duty Crushers Mills	1,3	1,4	1,5	1,5	1,6	1,8

Copyright reserved

TABLE 2

MINIMUM PULLEY DIAMETER (mm)

Speeds of faster than in r/min	Minimum pulley diameter (mm)																		
	Design Power (kW)																		
	To 1	**3,0**	**4,0**	**5,0**	**7,5**	**10**	**15**	**20**	**25**	**30**	**40**	**50**	**60**	**75**	**90**	**110**	**130**	**150**	**200**	**250**
500	67	90	100	112	125	140	180	200	212	236	250	280	280	315	375	400	450	475	500	560
600	67	85	90	100	112	125	140	180	200	212	224	250	265	280	300	335	375	400	475	500
720	67	80	85	90	90	106	132	150	160	170	200	236	250	265	280	300	335	375	450	500
960	67	75	80	85	95	100	112	132	150	180	180	200	224	250	280	280	300	335	400	450
1 200	67	71	80	80	95	95	106	118	132	150	160	180	200	236	236	250	265	300	335	355
1 440	67	67	75	80	85	85	100	112	125	140	160	170	190	212	236	236	250	280	315	335
1 800	67	67	71	75	80	85	95	106	112	125	150	160	170	190	212	224	236	265	300	335
2 800	67	67	67	67	80	80	85	90	100	112	125	140	160	170	180	212	224	236	-	-

Copyright reserved

MECHANOTECHNOLOGY N3

FORMULA SHEET

Any applicable formula may also be used.

1. *Corrected power per belt = (basic power per belt + power increment per belt) × correction factor*

2. *Force (F) = Pressure (P) × Area (A)*

3. *Work done (W) = Force (F) × Distance (s)*

4. *Volume (V) = Area of base (A) × Perpendicular height* $(\perp h)$

Copyright reserved