higher education & training

Department:
Higher Education and Training
REPUBLIC OF SOUTH AFRICA

NATIONAL CERTIFICATE

LOGIC SYSTEMS N3

(8080273)

1 December 2023 (X-paper)
09:00–12:00

Calculators may NOT be used. Drawing instruments may be used.

This question paper consists of 6 pages.

205Q1G2301

Copyright reserved

DEPARTMENT OF HIGHER EDUCATION AND TRAINING
REPUBLIC OF SOUTH AFRICA

NATIONAL CERTIFICATE
LOGIC SYSTEMS N3
TIME: 3 HOURS
MARKS: 100

INSTRUCTIONS AND INFORMATION

1. Answer all the questions.
2. Read all the questions carefully.
3. Number the answers according to the numbering system used in this question paper.
4. Keep questions and subsections of questions together.
5. Show all the steps in the calculations.
6. All the circuits and diagrams must be large, clear and neat.
7. Use only a blue or black pen. A pencil may be used for the sketches and diagrams.
8. Write neatly and legibly.

Copyright reserved

QUESTION 1: NUMBER SYSTEMS AND ARITHMETIC ELEMENTS

1.1 Draw a neat, fully labelled circuit diagram of a full adder using logic gates. (5)

1.2 Briefly describe *a half-subtractor.* (2)

1.3 Calculate the following and show all your conversions and calculations:

1.3.1 Use 1's complement to subtract 4_8 from 16_{10} in the binary number system and convert the final answer to the hexadecimal number system.

1.3.2 Multiply $25,5_{10}$ by $2,25_{10}$ in the binary number system and convert the answer back to the decimal number system.

(5 × 2) (10)

1.4 FIGURE 1 is a truth table for the circuit in QUESTION 1.1. Copy and complete the table in the ANSWER BOOK.

A	B	C_{in}	S	C_o
0	0			
0	0			
0	1			
0	1			
1	0			
1	0			
1	1			
1	1			

FIGURE 1

(3)
[20]

QUESTION 2: CODES, DATA AND DATA COMMUNICATION, ENCODERS AND DECODERS

2.1 Write a short definition of each of the following terms as applied in data communication and coding:

2.1.1 Hamming code

2.1.2 Self-complementing code

2.1.3 ASCII code

2.1.4 Weighted code

2.1.5 EBCDIC code

(5 × 1) (5)

2.2 Use the Hamming code to add the necessary parity bits to the following word:

1101 01 (6)

2.3 Encode or decode the following numbers as indicated and show the working:

2.3.1 Convert $101010000101_{XS3\ CODE}$ to a decimal number.

2.3.2 Convert 657_{10} to an 8421 BCD code.

2.3.3 Convert 264_{10} to the Gray code.

(3 × 3) (9)

[20]

QUESTION 3: LOGIC GATES INTEGRATED CIRCUIT AND LOGIC FAMILIES

3.1 FIGURE 2 shows the circuit of the 7041 IC package that contains four 2-input NAND gates. Answer the following questions:

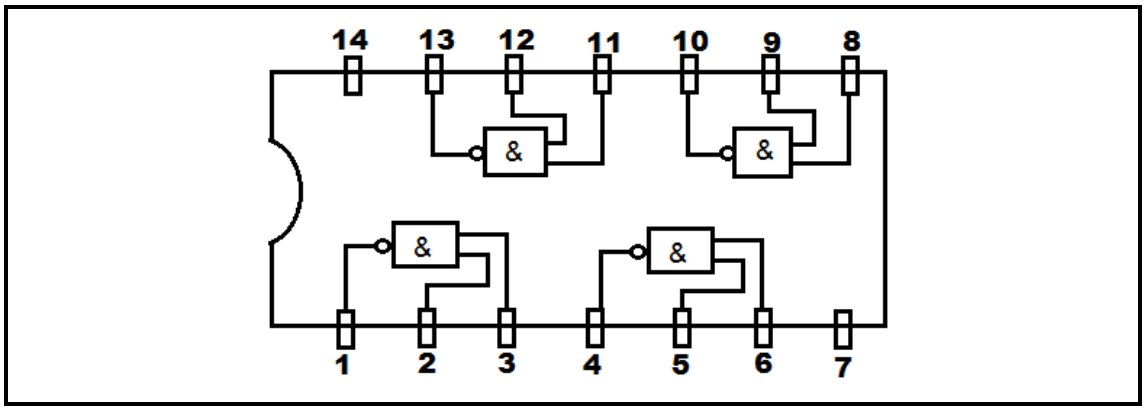

FIGURE 2

3.1.1 What would you connect to PIN 7?

3.1.2 What would you connect to PIN 14?

(2 × 1) (2)

3.2 Draw a switch circuit for each of the following logic gates:

3.2.1 NOT gate

3.2.2 OR gate

3.2.3 AND gate

(3 × 3) (9)

3.3 Compare bipolar IC technology and MOS technology in terms of the following:

3.3.1 Input voltage

3.3.2 Power consumption

3.3.3 Speed

(3 × 2) (6)

3.4 Draw a circuit diagram of a 2-input DTL NOR gate. (3)

[20]

QUESTION 4: MEMORY ELEMENTS AND MEMORIES

4.1 State FIVE important characteristics that should be used when comparing different types of memories. (5)

4.2 Indicate whether the following statements are TRUE or FALSE by writing only 'True' or 'False' next to the question number (4.2.1–4.2.5) in the ANSWER BOOK.

4.2.1 A dynamic memory cell is always a MOS type.

4.2.2 A static MOS memory cell consists of a flip-flop with a capacitive element.

4.2.3 The advantage of a bipolar cell is that it has greater power consumption.

4.2.4 An optical disc is an example of magnetic storage.

4.2.5 RAM stands for Read Access Memory.

(5 × 1) (5)

4.3 What is the meaning of the following flip-flops:

4.3.1 Leading-edge triggered flip-flop

4.3.2 Trailing-edge triggered flip-flop

(2 × 1) (2)

4.4 Draw a logic circuit of a clocked D-type flip-flop that employs inverters and NAND gates. (8)

[20]

QUESTION 5: SHIFT REGISTERS AND COUNTERS

5.1 With reference to pulse characteristics, explain what is meant by the following times:

5.1.1 Delay time

5.1.2 Storing time

5.1.3 Switch-on time

5.1.4 Switch-off time

(4 × 2) (8)

5.2 Briefly explain what is meant by *module 7 counter*. (2)

5.3 What is a ring counter? (2)

5.4 Draw a labelled diagram of a 5-bit, self-starting and -correcting ring counter using JK flip-flops. (8)

[20]

TOTAL: 100

Copyright reserved