higher education & training

Department:
Higher Education and Training
REPUBLIC OF SOUTH AFRICA

# MARKING GUIDELINE

## NATIONAL CERTIFICATE

## LOGIC SYSTEMS N3

## 1 December 2023

**This marking guideline consists of 9 pages.**

Copyright reserved

## QUESTION 1

1.1

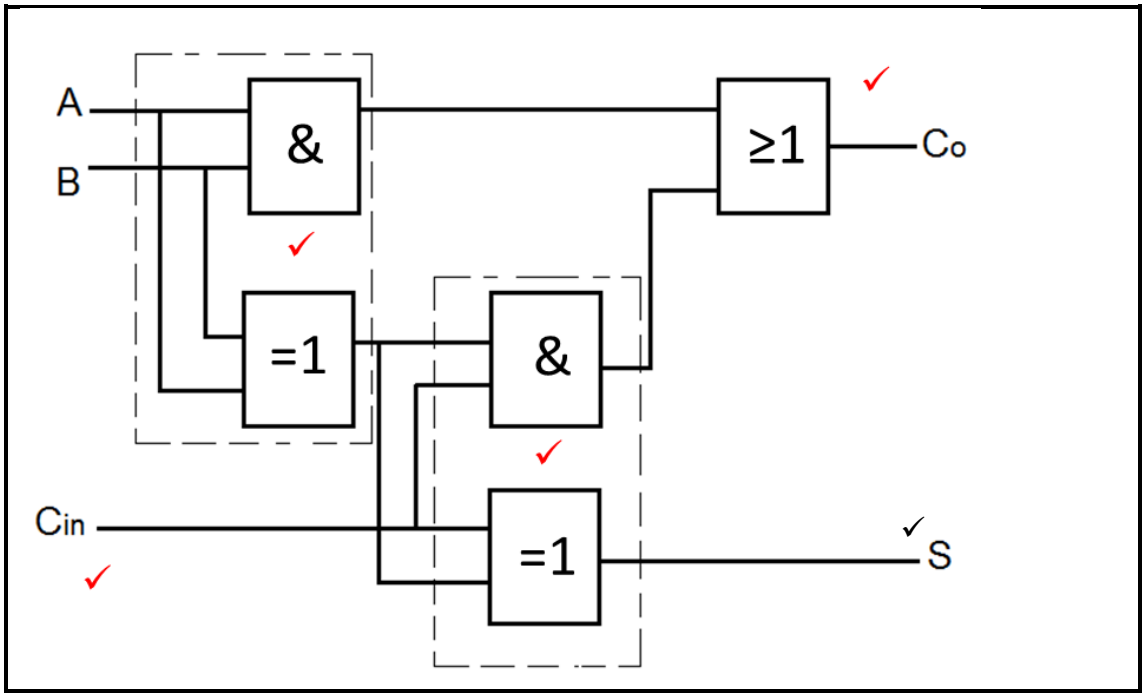


(5)

1.2 A `half-subtractor is used to subtract two binary numbers from each other and provides an output in the form of difference and borrow.✓✓ (2)

1.3 1.3.1

| | | 16 | 8 | 4 | 2 | 1 | |
|---|---|---|---|---|---|---|---|
| $16_{10}$ | | 1 | 0 | 0 | 0 | $0_2$ | ✓ |
| $4_{10}$ | | | | 1 | 0 | $0_2$ | ✓ |
| | | 0 | 0 | 1 | 0 | 0 | 4 |
| | | 1 | 1 | 0 | 1 | 1 | 1's complement of 4 ✓ |
| + | | 1 | 0 | 0 | 0 | 0 | 16 |
| = | 1 | 0 | 1 | 0 | 1 | 1 | |
| | | | | | + | 1 | Add carry ✓ |
| | | | 1 | 1 | 0 | 0 | |

$1100_2 = C_{16}$ ✓

1.3.2

| | 16 | 8 | 4 | 2 | 1 | 0.5 | 0.25 | |
|---|---|---|---|---|---|---|---|---|
| $25,5_{10}$ | 1 | 1 | 0 | 0 | 1 | $,1_2$ | | ✓ |
| $2,25_{10}$ | | | | 1 | 0 | ,0 | $1_2$ | ✓ |

| | | | | | | | | | | | |
|---|---|---|---|---|---|---|---|---|---|---|---|
| | | | | 1 | 1 | 0 | 0 | 1, | 1 | 0 | |
| X | | | | | | | 1 | 0, | 0 | 1 | |
| | | | | 1 | 1 | 0 | 0 | 1 | 1 | 0 | |
| | | | 0 | 0 | 0 | 0 | 0 | 0 | 0 | 0 | ✓ |
| | 0 | 0 | 0 | 0 | 0 | 0 | 0 | 0 | 0 | 0 | |
| + | 1 | 1 | 0 | 0 | 1 | 1 | 0 | 0 | 0 | 0 | |
| = | 1 | 1 | 1 | 0 | 0 | 1, | 0 | 1 | 1 | 0 | ✓ |

$111001,011_2 = 57,375_{10}$ ✓

(5 × 2) (10)

1.4

| A | B | $C_{in}$ | S | $C_o$ |
|---|---|---|---|---|
| 0 | 0 | 0 | 0 | 0 |
| 0 | 0 | 1 | 1 | 0 |
| 0 | 1 | 0 | 1 | 0 |
| 0 | 1 | 1 | 0 | 1 |
| 1 | 0 | 0 | 1 | 0 |
| 1 | 0 | 1 | 0 | 1 |
| 1 | 1 | 0 | 0 | 1 |
| 1 | 1 | 1 | 1 | 1 |
| | | ✓ | ✓ | ✓ |

(3)
**[20]**

## QUESTION 2

2.1 2.1.1 Hamming code is a method used to detect errors in data communication by adding parity bits to the data being transferred.

2.1.2 The characteristic of the self-complementing code is that the weight values add up to a total of 9.

2.1.3 ASCII code is a seven-bit alphanumeric code used for information interchange.

2.1.4 Weighted code is any code in which the value of each bit is defined or carries a specific weight.

2.1.5 EBCDIC code is an eight-bit per character code used by large computers.

(5 × 1) (5)

2.2

| Positions | 1 | 2 | 3 | 4 | 5 | 6 | 7 | 8 | 9 | 10 |
|---|---|---|---|---|---|---|---|---|---|---|
| | $P_1$ | $P_2$ | $D_1$ | $P_3$ | $D_2$ | $D_3$ | $D_4$ | $P_4$ | $D_5$ | $D_6$ |
| | ? | ? | 1 | ? | 1 | 0 | 1 | ? | 0 | 1 |

| | |
|---|---|
| Positions 1,3,5,7,9 | $P_1 + D_1 + D_2 + D_4 + D_5$<br>$P_1 + 1 + 1 + 1 + 0$<br>$P_1 = 1$ ✓ |

| | |
|---|---|
| Positions 2,3,6,7,10 | $P_2 + D_1 + D_3 + D_4 + D_6$<br>$P_2 + 1 + 0 + 1 + 1$<br>$P_2 = 1$ ✓ |

| | |
|---|---|
| Positions 4,5,6,7 | $P_3 + D_2 + D_3 + D_4$<br>$P_3 + 1 + 0 + 1$<br>$P_3 = 0$ ✓ |

| | |
|---|---|
| Positions 8,9,10 | $P_4 + D_5 + D_6$<br>$P_4 + 0 + 1$<br>$P_4 = 1$ ✓ |

The new word is $1110101101_{\text{Hamming code}}$ ✓✓

(6)

2.3 2.3.1

| 1010 | 1000 | 0101 |
|---|---|---|
| ↓ | ↓ | ↓ |
| 10 | 8 | 5 |
| -3 | -3 | -3 |
| ↓ | ↓ | ↓ |
| 7 | 5 | 2 |
| ✓ | ✓ | ✓ |

$101010000101_{XS3\ CODE} = 752_{10}$

2.3.2

| 6 | 5 | 7 |
|---|---|---|
| ↓ | ↓ | ↓ |
| 0110 | 0101 | 0111 |
| ✓ | ✓ | ✓ |

$657_{10} = 011001010111_{8421\ BCD\ CODE}$

2.3.3

| | | | | | | | | | | | | | | | | ✓ |
|---|---|---|---|---|---|---|---|---|---|---|---|---|---|---|---|---|
| **1** | + | **0** | + | **0** | + | **0** | + | **0** | + | **1** | + | **0** | + | **0** | + | **0** |
| ↓ | | ↓ | | ↓ | | ↓ | | ↓ | | ↓ | | ↓ | | ↓ | | ↓ |
| ↓ | | sum | | sum | | sum | | sum | | sum | | sum | | sum | | |
| ↓ | | ↓ | | ↓ | | ↓ | | ↓ | | ↓ | | ↓ | | ↓ | | ↓ |
| **1** | | **1** | | **0** | | **0** | | **0** | | **1** | | **1** | | **0** | | **0** |

$264_{10} = 110001100_{GRAY\ CODE}$ ✓✓

(3 × 3) (9)

**[20]**

## QUESTION 3

3.1 3.1.1 Ground or earth

3.1.2 Vcc or Vsupply

(2 × 1) (2)

3.2 3.2.1

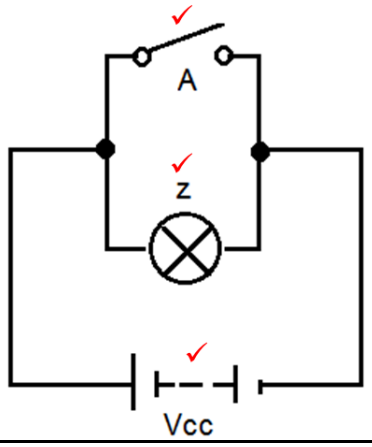

3.2.2

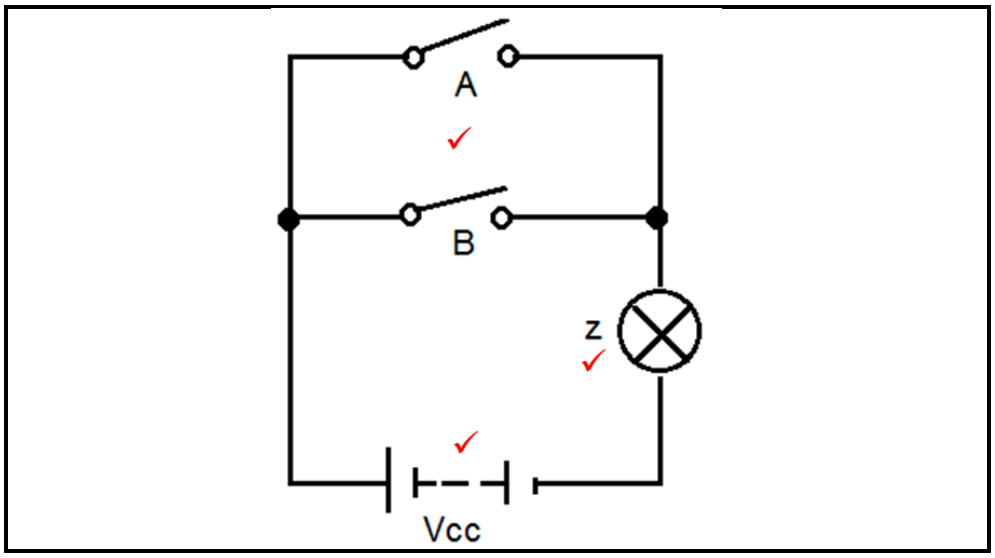


3.2.3

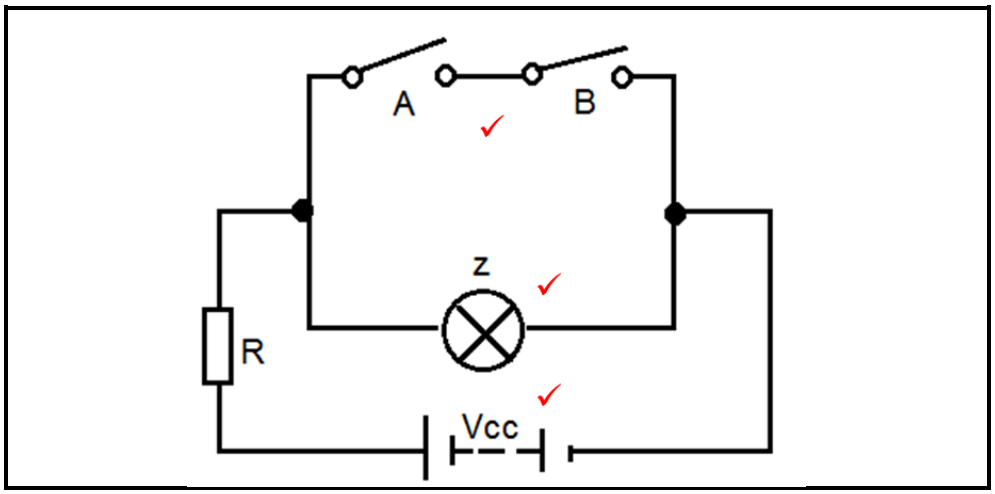


(3 × 3) (9)

3.3 3.3.1 Bipolar ICs usually operate from an input voltage of +/-5 V while MOS circuits operate between 5−20 V.

3.3.2 Bipolar ICs use more power than MOS circuits.

3.3.3 Bipolar ICs operate at higher speeds than MOS circuits.

(3 × 2) (6)

3.4

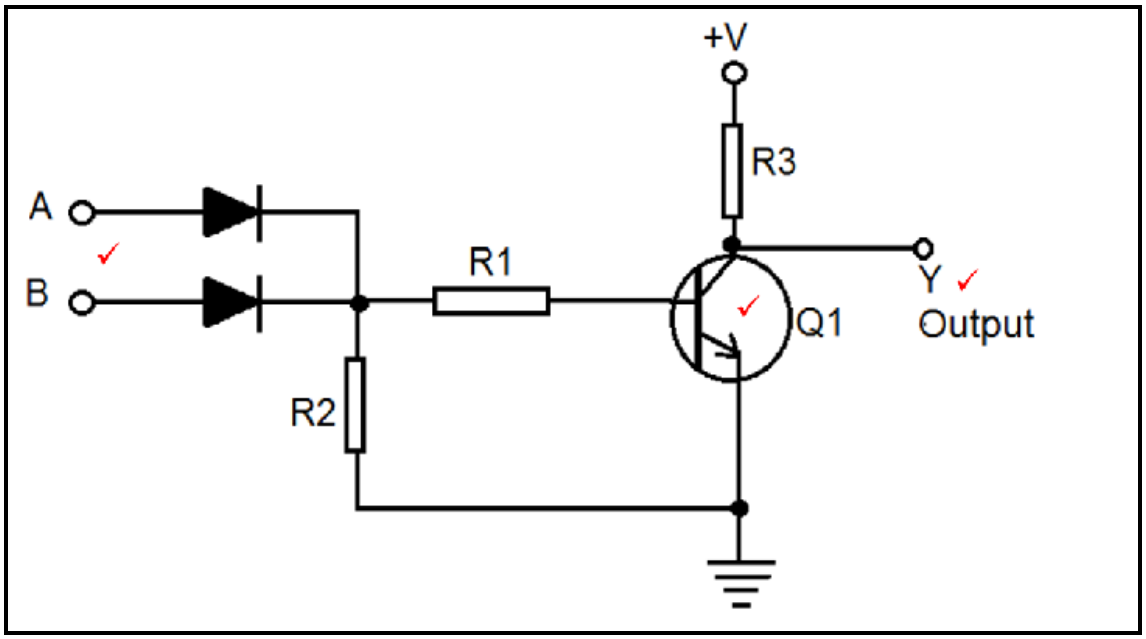


(3)
**[20]**

**QUESTION 4**

4.1
- Bit density and total capacity for practical memory.
- Speed at which data is available.
- Speed at which write-in or read-out cycles can be completed.
- Power required by the memory.
- Storage cost measured per bit.
- Convenience of whether or not the data can be lost in the case of a power failure.

(Any 5 × 1) (5)

4.2
4.2.1 True
4.2.2 False
4.2.3 True
4.2.4 False
4.2.5 False

(5 × 1) (5)

4.3
4.3.1 Leading-edge triggered flip-flop means that the flip-flop reacts on the positive edge of the clock pulse when it is changing from 0 to 1.

4.3.2 Trailing-edge triggered flip-flop means that the flip-flop reacts on the negative edge of the clock pulse when it is changing from 1 to 0.

(2 × 1) (2)

4.4

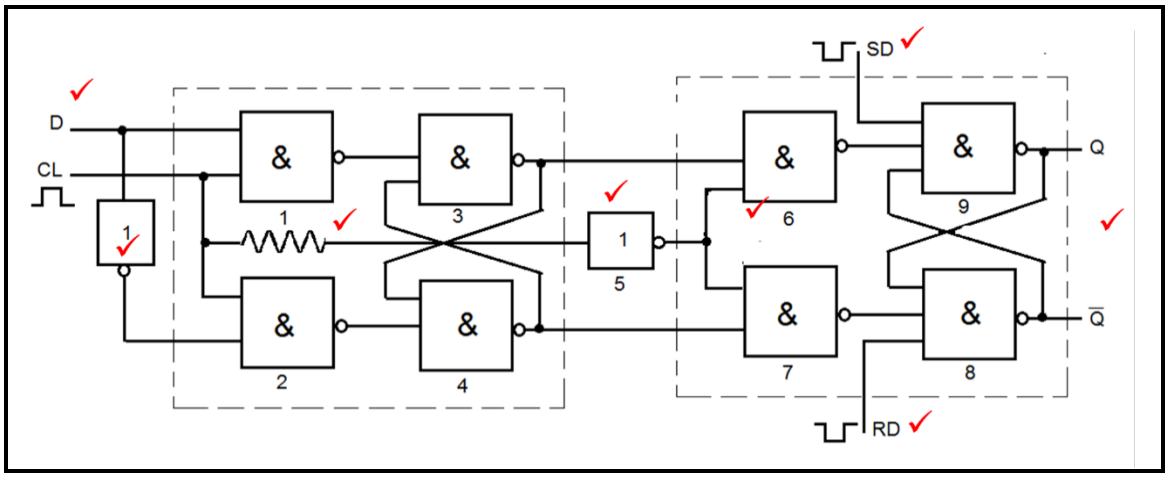


(Any 8 × 1) (8)
**[20]**

## QUESTION 5

5.1 5.1.1 Delay time is the time which elapses from the time the input pulse reaches 10 % of its maximum until the output signal has reached 10 % of its maximum.

5.1.2 Storing time is the time which elapses from the time the input pulse reaches 90 % of its maximum to the time the output pulse reaches 90 % of its maximum.

5.1.3 Switch-on time is the time which elapses from the time the input signal first reaches 10 % of its maximum until time the output signal first reaches 90 % of its maximum.

5.1.4 Switch-off time is the time which elapses from the time the input signal reaches 90 % of its maximum for the second time until the output signal reaches 10 % of its maximum value for the second time.

(4 × 2) (8)

5.2 Module 7 counter is a counter which counts seven positions from 0 to 6 and then switches back to the original position. (2)

5.3 A ring counter is a circulating register that contains only one 1 and the rest are zeros. Usually the one 1 is the least significant bit. (2)

Copyright reserved 

5.4

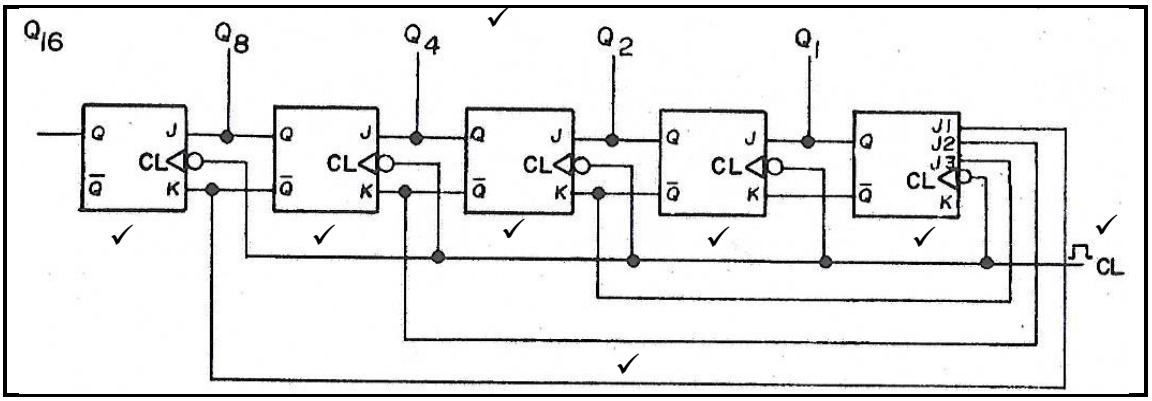


(8)
**[20]**

**TOTAL: 100**

Copyright reserved