higher education & training

Department:
Higher Education and Training
REPUBLIC OF SOUTH AFRICA

MARKING GUIDELINE

NATIONAL CERTIFICATE

INSTRUMENT TRADE THEORY N3

28 November 2023

This marking guideline consists of 7 pages.

Copyright reserved

QUESTION 1

1.1 1.1.1 Spiral/Foil type strain gauge. (1)

1.1.2 Bonded type strain gauge. (1)

1.1.3
- They follow the surface to which they are cemented very well.
- They are easily made waterproof.
- Special patterns are easily produced.
- They can be prepared within a few minutes with the proper cement and equipment.
- They have a relatively small creep and hysteresis effect.
- They have a high gauge factor.
- Foil gauges dissipate heat easily because of the high contact area. (7)

1.2 1.2.1 A load cell is essentially a force transducer or force sensor. (1)

1.2.2 Measuring mass or weight. (1)

1.2.3 Unbonded type strain gauge or non-bonded type strain gauge. (1)

1.2.4

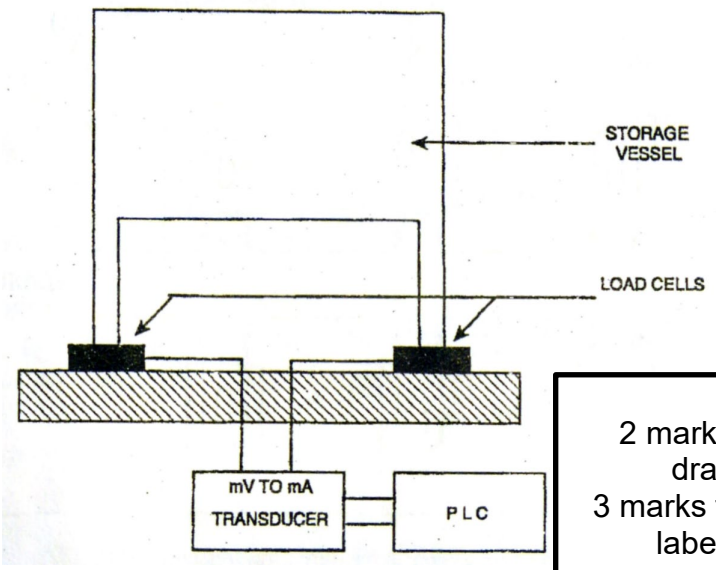

2 marks for correct drawing✓✓
3 marks for the correct labelling✓✓✓

(5)

1.3 1.3.1 True
1.3.2 True
1.3.3 True
1.3.4 True
1.3.5 False
1.3.6 False

(6 × 1) (6)

1.4
- The temperature measurement in a location.
- The pressure produced by a cooling water pumping system.
- The voltage maintained by a standby generator.
- The flow in a pipeline. (Any 2 × 1)

(Marker to use own discretion) (2)
[25]

QUESTION 2

2.1 2.1.1 The law of intermediate metals states that a third metal may be inserted into a thermocouple system without affecting the emf generated,✓✓ if, and only if, the junctions with the third metal are kept at the same temperature.✓

OR

A law stating that the use of a third metal in a thermocouple circuit does not affect the voltage, as long as the temperature of the three metals at the point of junction is the same.

2.1.2 The law of intermediate temperatures states that the sum of the emf developed by a thermocouple with its junctions at temperatures T1 and T2,✓✓ and with its junctions at temperatures T2 and T3, will be the same as the emf developed if the thermocouple junctions are at temperatures T1 and T3. ✓

OR

A law stating that in a thermocouple circuit, if a voltage is developed between two temperatures T1 and T2, and another voltage is developed between temperatures T2 and T3, the thermocouple circuit generates a voltage that is the sum of those two voltages when operating between temperatures T1 and T3.

(3 × 2) (6)

Copyright reserved

2.2

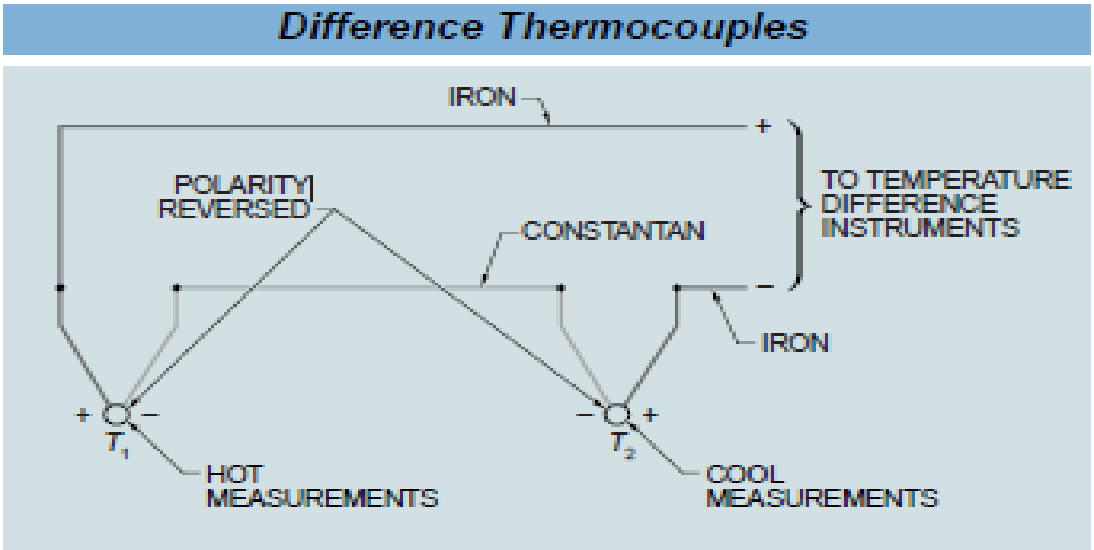

2 marks for the sketch
1 mark for the correct polarities
3 marks for labels (6)

2.3 2.3.1

- The measurement of the total energy radiated from a heated body.
- The measurement of a spectral radiant intensity of the radiated energy from the heated body at a given wavelength. (2)

2.3.2

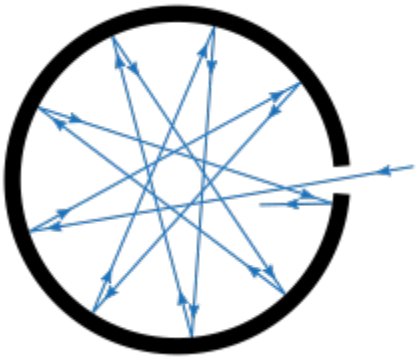

(3)

2.4 $I_s = 2\ mA\surd$

$R_s = \frac{V_{sc}}{I_s} = \frac{1,019}{0,002} = 509,5\ \Omega\checkmark$

$R_{cj} = R_0 + \Delta R = 6,1\ \Omega$ at 35 °C✓

$R_z = \frac{V_{min}}{I_s} + R_{cj} = \frac{0,0081}{0,002} + 6,1 = 10,15\ \Omega\checkmark$

$R_u = \frac{V_{sc} - V_{max}}{I_s} = \frac{1,019 - 0,0413}{0,002} = 489\ \Omega\checkmark$

$R_t = \frac{V_{max} - V_{min}}{I_s} = \frac{0.0413 - 0,0081}{0,002} = 16,6\ \Omega\checkmark$

$R_{sh} = \frac{R_{sw} \times R_t}{R_{sw} - R_t} = \frac{20 \times 16,6}{20 - 16,6} = 97,6\ \Omega\checkmark$

(8)
[25]

QUESTION 3

3.1 3.1.1

- Supply variations✓
  The supply voltage must be stabilised because the readings will vary as the supply varies.✓
- The load resistor✓
  The value of the load resistance affects the linearity between the slider position and the voltage.✓
- The lead wires✓
  The lead wires between the transmitter and receiver are affected by the temperature changes and thus have an effect on the total resistance of the system.✓ (3 × 2) (6)

3.1.2

- A regulator, for example, a Barretter lamp is used.
- Two voltage and two current coils are used.
- A ratiometer instrument is used to compensate for the supply variations. (Any 2 × 1) (2)

3.2 3.2.1 Voltage telemetering system

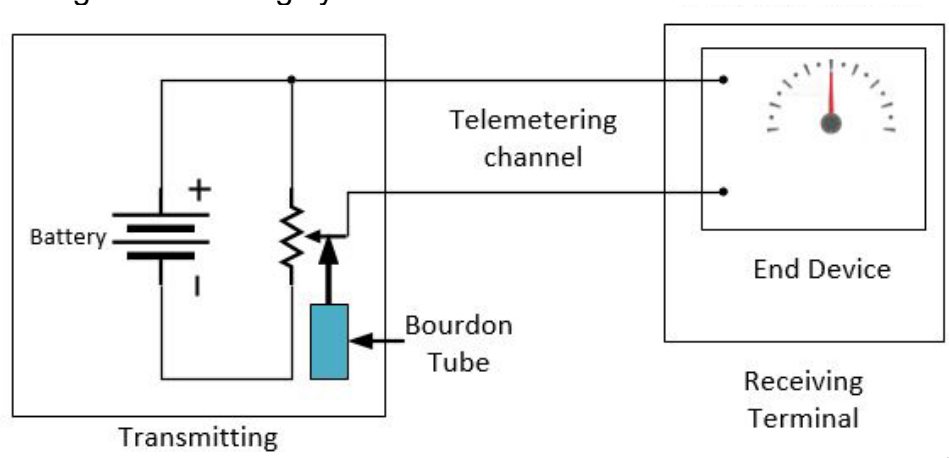

1 Mark for Bourdon tube✓
1 Mark for telemetering channel✓
4 Marks for the correct drawing✓✓✓✓

3.2.2

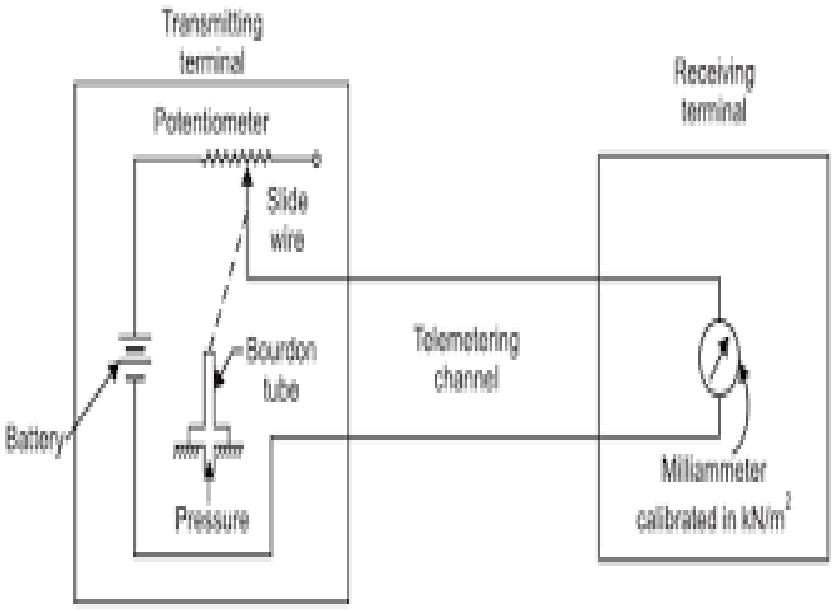

1 Mark for Bourdon tube✓
1 Mark for telemetering channel✓
4 Marks for the correct drawing✓✓✓✓
(2 × 6) (12)

3.3 3.3.1 D
3.3.2 G
3.3.3 F
3.3.4 E
3.3.5 A

(5 × 1) (5)
[25]

QUESTION 4

4.1 4.1.1

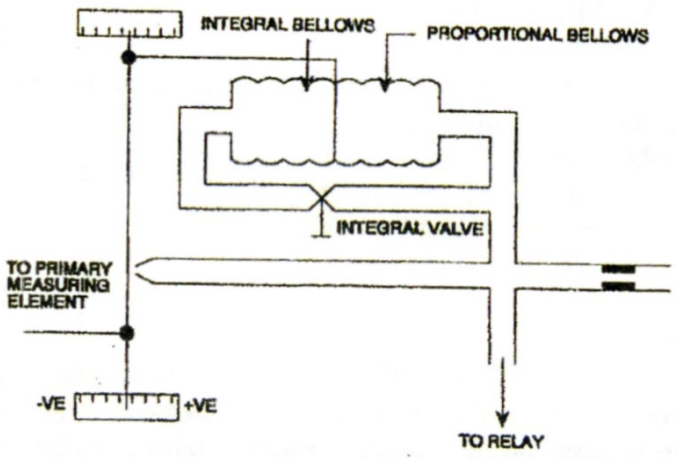

3 marks for correct drawing✓✓✓
3 marks for labelling✓✓✓

(6)

4.1.2
- The controller consists of two bellows acting in opposite directions. Proportional bellows are fed directly from the flapper and the integral bellows are fed via the valve.
- The midpoint of the bellows, couples to the flapper for negative feedback.
- With the integral restrictor fully open, the system will act as a two-step controller.
- With the restrictor fully closed, the system would operate as if it only had proportional action. (4)

4.2
- Basic forces
- Pressure load
- Weight load
- Inertia load
- Friction load (5)

4.3 4.3.1 It is the maintenance of a balanced condition within a process without human intervention. (2)

4.3.2 It is a simple control system that contains no feedback loop✓ and therefore the measured variable is not controlled or corrected.✓✓ (3)

4.4 4.4.1
- Distance-velocity lag
- Transfer lag
- Process lag (3)

4.4.2 The act of physically or chemically changing matter✓ including combining matter or converting energy.✓
(Marker to use own discretion) (2)
[25]

TOTAL: 100

Copyright reserved