higher education & training

Department:
Higher Education and Training
REPUBLIC OF SOUTH AFRICA

# MARKING GUIDELINE

## NATIONAL CERTIFICATE

## INDUSTRIAL ELECTRONICS N3

## 22 NOVEMBER 2023

**This marking guideline consists of 12 pages.**

Copyright reserved

## SECTION A

## QUESTION 1

| | | | | |
|---|---|---|---|---|
| 1.1 | 1.1.1 | C | | |
| | 1.1.2 | A | | |
| | 1.1.3 | B | | |
| | 1.1.4 | D | | |
| | 1.1.5 | D | | |
| | | | (5 × 1) | (5) |
| 1.2 | 1.2.1 | True | | |
| | 1.2.2 | True | | |
| | 1.2.3 | False | | |
| | 1.2.4 | False | | |
| | 1.2.5 | True | | |
| | | | (5 × 1) | (5) |
| 1.3 | 1.3.1 | Surge current | | |
| | 1.3.2 | Minimum | | |
| | 1.3.3 | Class B | | |
| | 1.3.4 | Transient | | |
| | 1.3.5 | Transmit electrical energy | | |
| | | | (5 × 1) | (5) |
| 1.4 | 1.4.1 | B | | |
| | 1.4.2 | G | | |
| | 1.4.3 | C | | |
| | 1.4.4 | A | | |
| | 1.4.5 | E | | |
| | | | (5 × 1) | (5) |
| | | | | **[20]** |

**TOTAL SECTION A: 20**

## SECTION B

## QUESTION 2: DC THEORY AND AC THEORY

2.1.

***Loop BAFE:***

$V_T = V_{R3} + V_{R2} + V_{R1}$
$V_T = (I_1 + I_2)R_3 + I_1.R_2 + I_1.R_1$
$12 = 3kI_1 + 3kI_2 + 1k3I_1 + 1kI_1$ ✓
$12 = 5k3I_1 + 3kI_2$ _____(1) ✓

***Loop BCDE:***

$V_T = V_{R3} + V_{R4} + V_{R5}$
$V_T = (I_1 + I_2)R_3 + I_2R_4 + I_2R_5$ ✓
$12 = (I_1 + I_2)3k + 3k5I_2 + 2k5I_2$
$12 = 3kI_1 + 3kI_2 + 6kI_2$
$\underline{12 = 3kI_1 + 9kI_2}$ ---------- (2) ✓

$(1) \times 3$:
$36 = 15k9I_1 + 9kI_2$ ---------- (3) ✓

$(3) - (2)$:
$36 = 15k9I_1 + 9kI_2$ ---------- (3) ✓
$\underline{12 = 3kI_1 + 9kI_2}$ ---------- (2)
$24 = 12k9I_1$
$\underline{I_1 = 1{,}861mA}$ ✓

Replace $\underline{I_1 = 1{,}861mA}$ in (1)
$12 = 5k3(1{,}861 \times 10^{-3}) + 3kI_2$ ✓
$12 = 9{,}863 + 3kI_2$ ✓
$3kI_2 = 2{,}137$
$\underline{I_2 = 0{,}712mA}$ ✓ (10)

2.2.

2.2.1

$X_C = \frac{1}{2\pi fC}$ $\quad$ $X_C = \frac{1}{2\pi fC}$

$X_C = \frac{1}{2\pi(50)(100\mu)}$ ✓ OR $X_C = \frac{1}{2(3{,}142)(50)(100\mu)}$

$\underline{X_C = 31{,}831\Omega}$ ✓ $\quad$ $\underline{X_C = 31{,}827\Omega}$

$X_L = 2\pi fL$ $\quad$ $X_L = 2\pi fL$

$X_L = 2\pi(50)(0{,}15)$ ✓ OR $X_L = 2(3{,}142)(50)(0{,}15)$

$\underline{X_L = 47{,}124\Omega}$ ✓ $\quad$ $\underline{X_L = 47{,}13\Omega}$ (4)

2.2.2

$$I_L = \frac{V}{X_L} \qquad I_L = \frac{V}{X_L}$$

$$I_L = \frac{220}{47,124} \checkmark \text{ OR } I_L = \frac{220}{47,13}$$

$$\underline{I_L = 4,669A} \checkmark \qquad \underline{I_L = 4,668A}$$

$$I_C = \frac{V}{X_C}$$

$$I_L = \frac{220}{31,831} \checkmark$$

$$\underline{I_L = 6,912A} \checkmark$$

$$I_R = \frac{V}{R}$$

$$I_L = \frac{220}{50}$$

$$\underline{I_L = 4,4A} \checkmark$$

(5)

2.2.3

$$I_T = \sqrt{I_R^2 + (I_C - I_L)^2}$$

$$I_T = \sqrt{4,4^2 + (6,912 - 4,669)^2} \checkmark$$

$$\underline{I_T = 4,939A} \checkmark$$

(2)

2.2.4

$$\cos\phi = \frac{I_R}{I}$$

$$\phi = \cos^{-1}\frac{4,4}{4,939} \checkmark$$

$$\underline{\phi = 27,017°} \checkmark$$

(2)
**[23]**

## QUESTION 3: SEMI-CONDUCTOR DIODES AND TRANSDUCERS

3.1 3.1.1

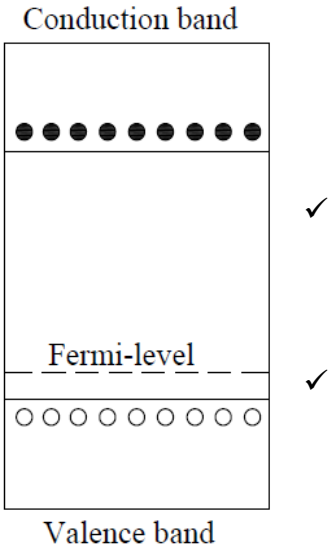


(Marker to use discretion) (2)

3.1.2

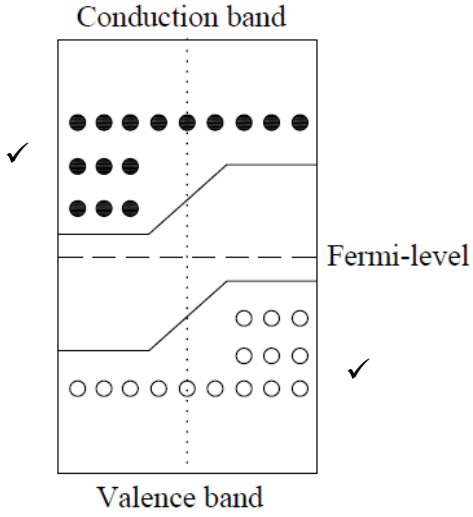


(Marker to use discretion) (2)

3.2 3.2.1

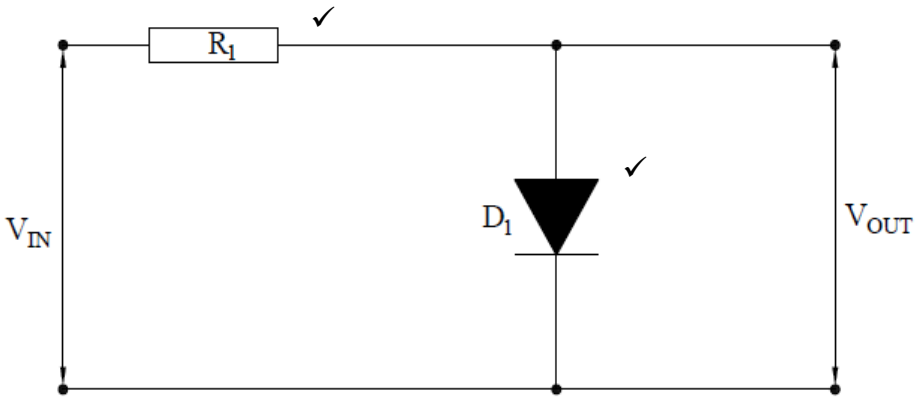


(Marker to use discretion) (2)

3.2.2

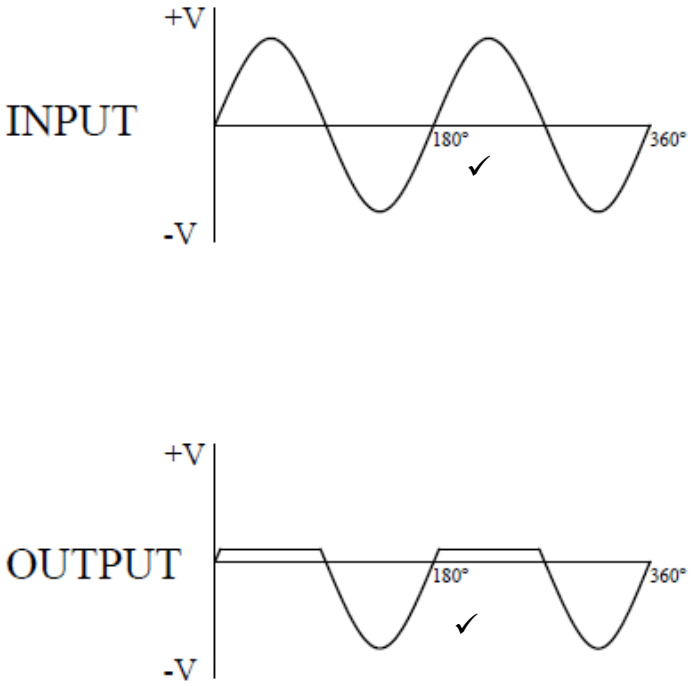


(2)

3.3

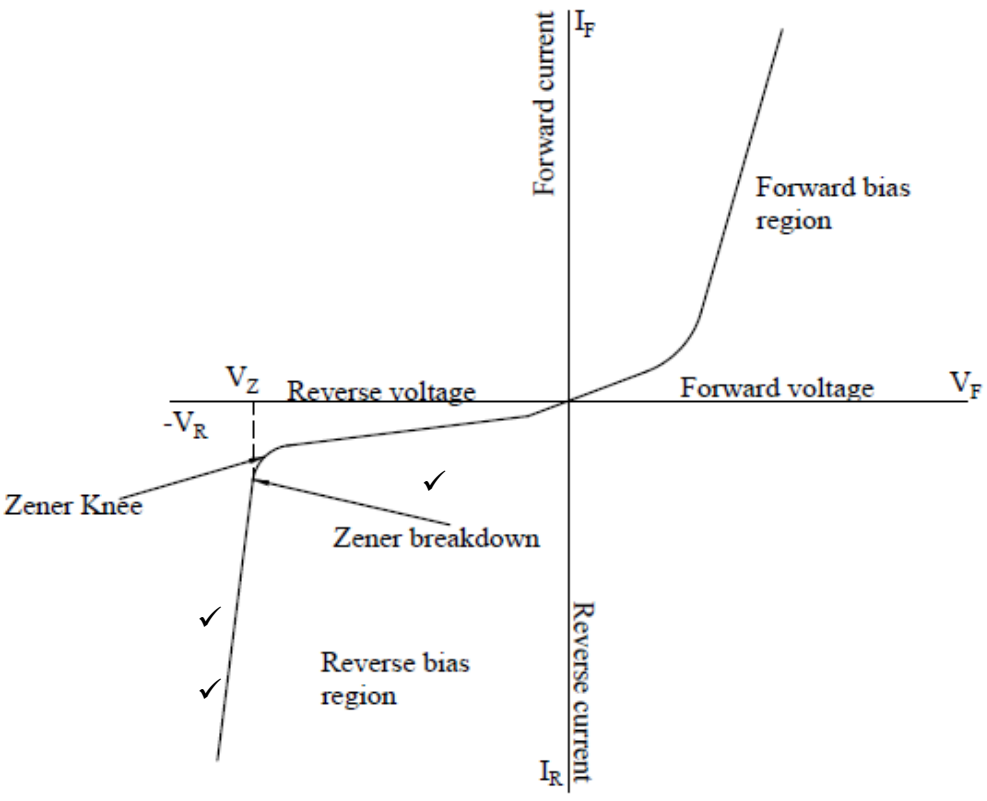


(Marker to use discretion) (3)

3.4
- If a PN junction is forward biased, free electrons will flow in the (conduction band) N-type material and are forced to the P-type material.
- The electrons combine with the holes in the P-type material (valence band).
- The high energy level electrons give of energy in the form of light to drop to lower level of energy.

(Marker to use discretion)(Any 2 × 1) (2)

3.5
- The capacitive transducers work on the principle of change in capacitance of the capacitor.
- This change in capacitance is caused by change in the overlapping area (A) of the plates, change in the distance (d) between the plates and change in dielectric constant (e).

(Marker to use discretion) (2)

3.6 3.6.1

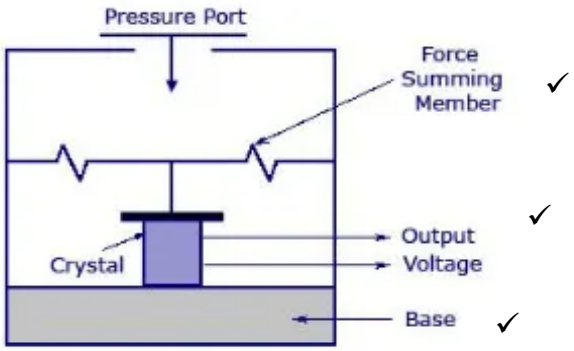


(Marker to use discretion) (3)

3.6.2
- Sound – microphones
- Acceleration – acceleration meter
- Pressure changes – force measuring
- Vibration – ultrasonic cleaning

(Any 2 × 1) (2)
**[20]**

## QUESTION 4: SEMI-CONDUCTOR TRANSISTORS AND OPERATIONAL AMPLIFIERS

4.1

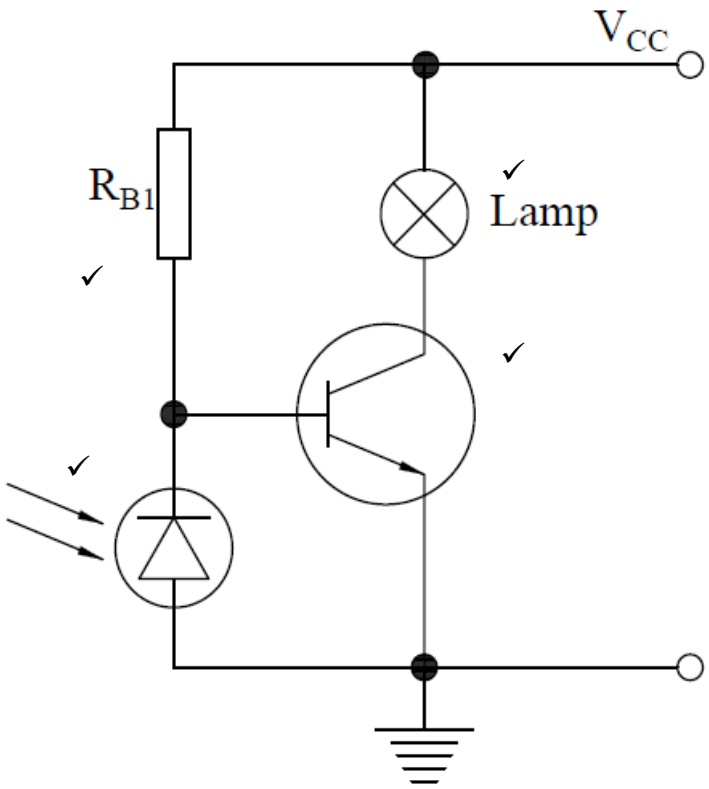


(Marker to use discretion) (4)

4.2

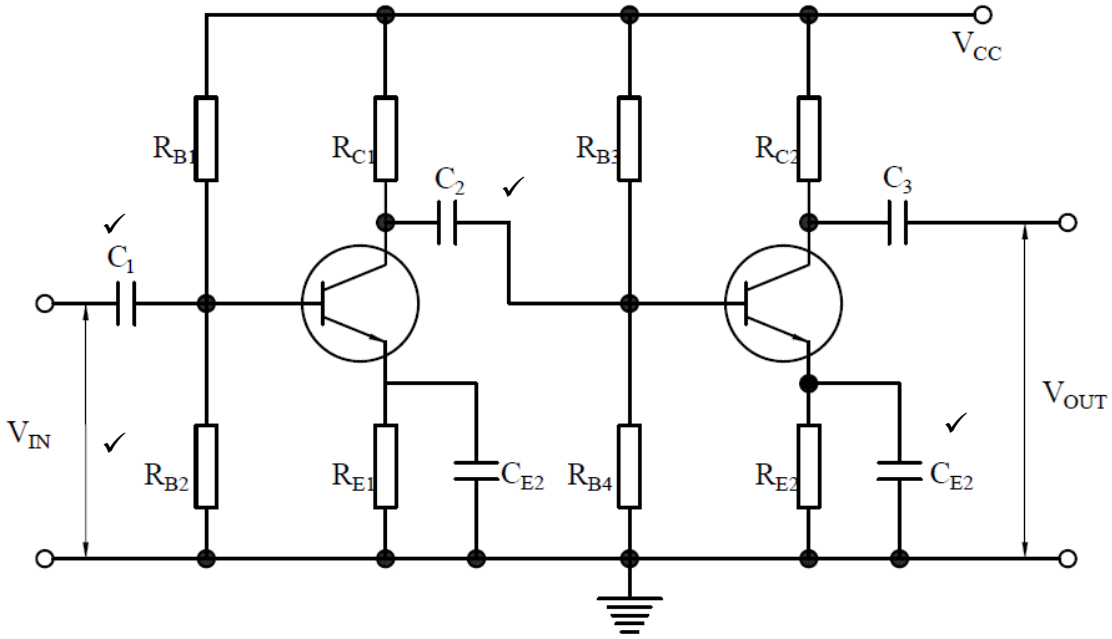


(Marker to use discretion) (4)

4.3

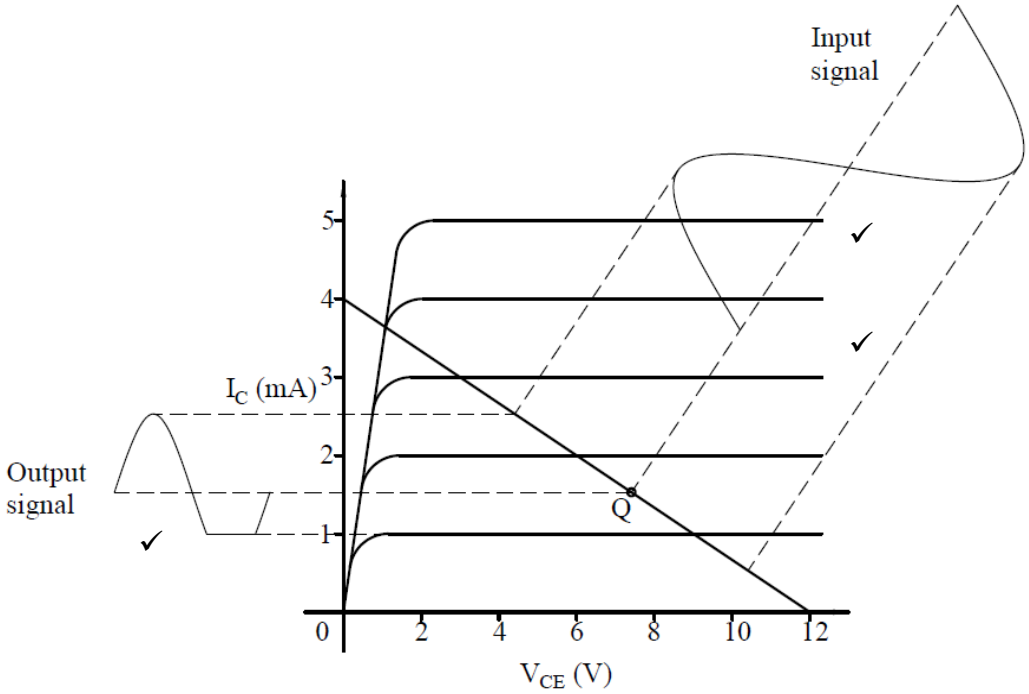


(Marker to use discretion) (3)

4.4 4.4.1 Both the common collector – and common base amplifiers have no phase shift.✓ (1)

4.4.2 The common base amplifier has a very high voltage gain✓ while the common collector has no voltage gain.✓ (2)

4.5 4.5.1

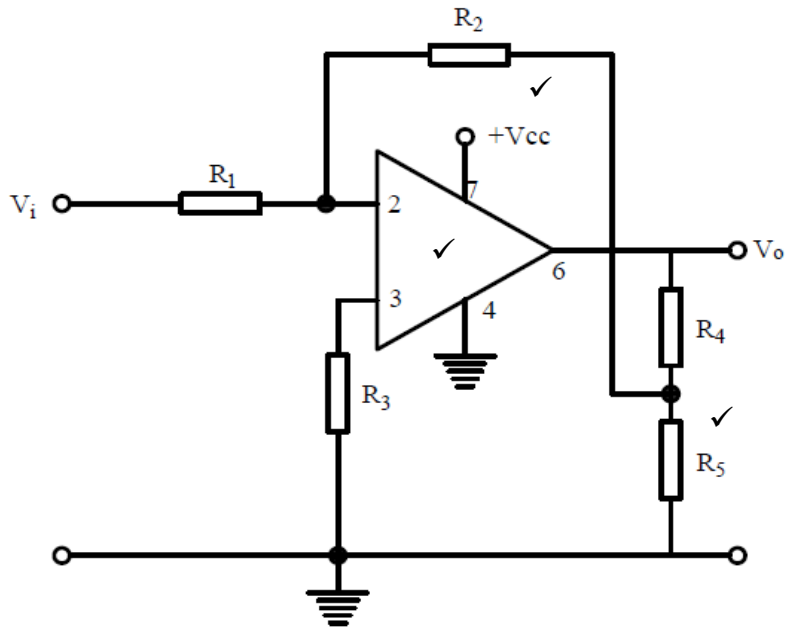


OR (3)

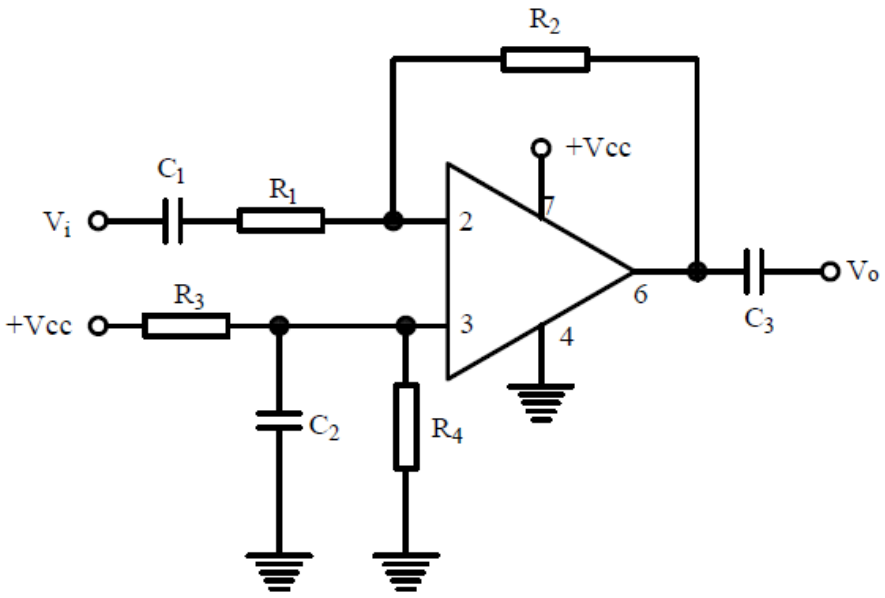


4.5.2

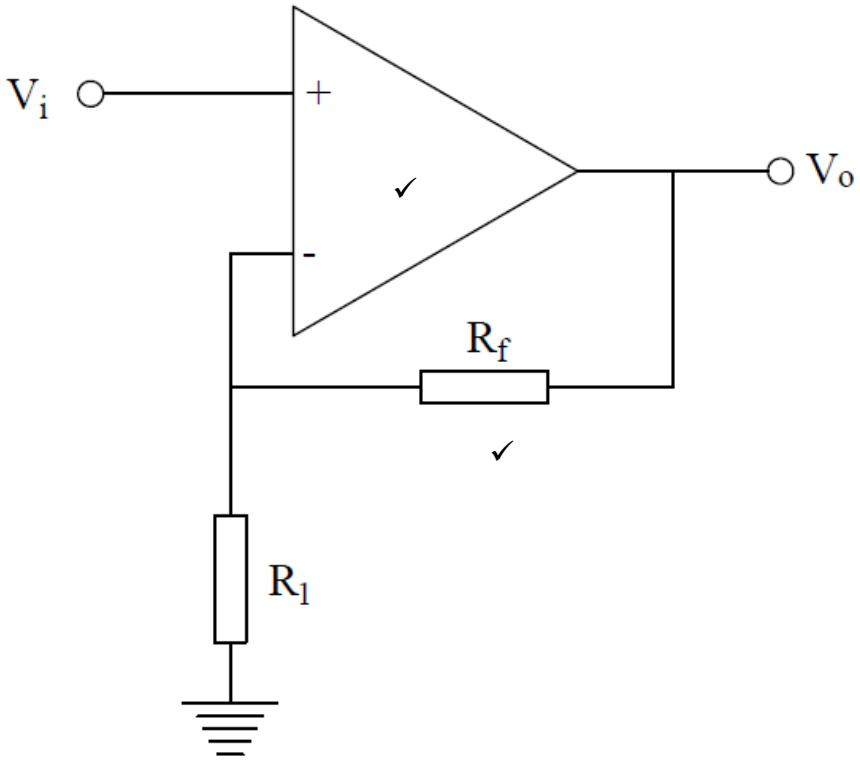


(Marker to use discretion) (2)
**[19]**

## QUESTION 5: MEASURING INSTRUMENTS AND ELECTRONIC POWER CONTROL

5.1
- Instrumental errors are due to the flaws of the instrument.
- Environmental errors are due to external conditions affecting the instrument.

(Marker to use discretion) (2)

5.2

- Electrons emitted from the cathode pass through the small hole of the control grid.
- The potential of the grid determines the number of electrons emitted, thus the brightness of the beam.
- Electron beam passes through the three anodes that focus and accelerate it.
- The X-plate is for horizontal deflection and the Y-plate is for vertical deflection.

(Marker to use discretion) (3)

5.3

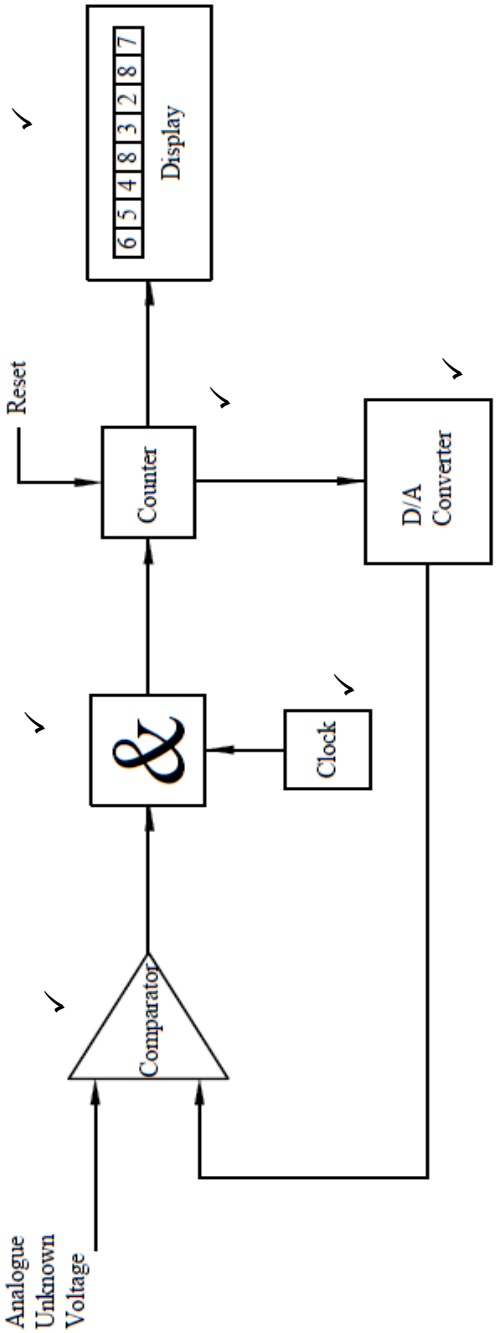


(Marker to use discretion) (6)

5.4

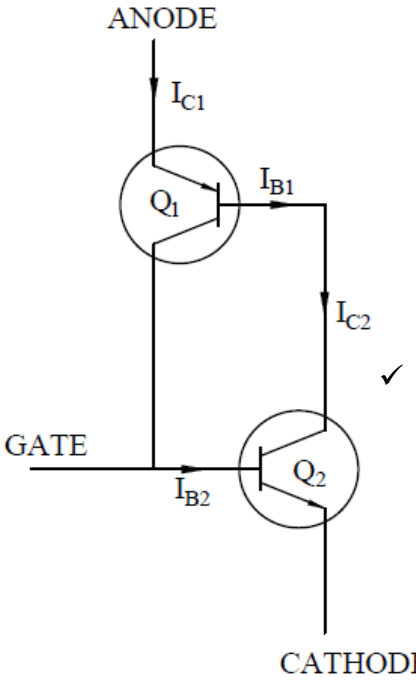


- If a positive pulse is applied on the GATE terminal it will forward bias the BE junction of Q2, this will result in collector flow in Q2.✓
- If collector of Q2 is connected to base of Q1, enough base current will flow and BE junction is forward biased.✓
- Both Q1 & Q2 stay on.✓ (4)

5.5

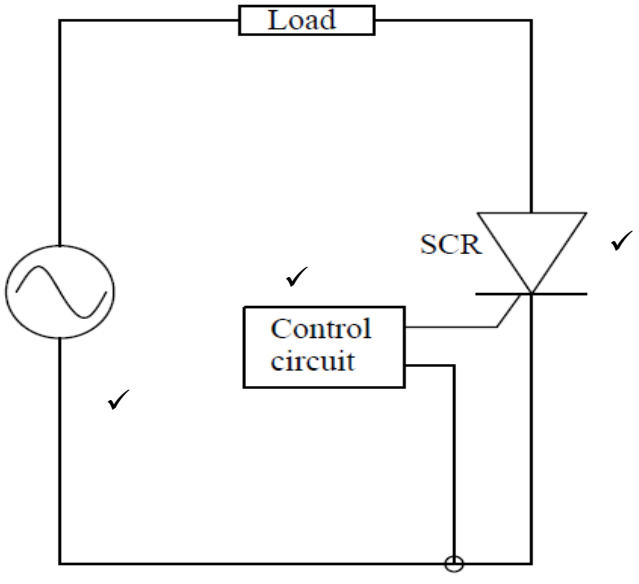


(Marker to use discretion) (3)
**[18]**

**TOTAL SECTION B: 80**
**GRAND TOTAL: 100**

Copyright reserved