higher education & training

Department:
Higher Education and Training
REPUBLIC OF SOUTH AFRICA

ENGINEERING STUDIES – MARKING GUIDELINE

NATIONAL CERTIFICATE

ELECTRICAL TRADE THEORY N3

AUGUST 2022

(11041263)

EXAM DATE (X-Paper)
09:00–12:00

This marking guideline consists of 9 pages.

Copyright reserved

QUESTION 1: ALTERNATING CURRENT CIRCUIT THEORY

1.1 1.1.1

$$i_1 = \frac{0 + 10{,}6}{2} = 5{,}3A\checkmark \qquad i_2 = \frac{10{,}6 + 20}{2} = 15{,}3A\checkmark$$

$$i_3 = \frac{20 + 24.8}{2} = 22{,}4A\checkmark \qquad i_4 = \frac{24{,}8 + 22}{2} = 23{,}4A\checkmark$$

$$i_5 = \frac{22 + 8{,}9}{2} = 15{,}45\checkmark \qquad i_6 = \frac{8{,}9 + 0}{2} = 4{,}45A\checkmark$$

$$I_{ave} = \frac{i_1 + i_2 + i_3 + i_4 + i_5 + i_6}{6}$$

$$I_{ave} = \frac{5{,}3 + 15{,}3 + 22{,}4 + 23{,}4 + 15{,}45 + 4{,}45}{6}\checkmark$$

$$I_{ave} = 14{,}383A\checkmark$$

(8)

1.1.2

$$I_{RMS} = \sqrt{\frac{i_1^2 + i_2^2 + i_3^2 + i_4^2 + i_5^2 + i_6^2}{6}}$$

$$I_{RMS} = \sqrt{\frac{5{,}3^2 + 15{,}3^2 + 22{,}4^2 + 23{,}4^2 + 15{,}45^2 + 4{,}45^2}{6}}\checkmark$$

$$I_{RMS} = 16{,}176A\checkmark$$

(2)

1.2 Impedance is the total opposition to current in any AC circuit. ✓ It is the vectoral addition of heat-generating resistance and total non-heat generating reactance. ✓ (2)

1.3

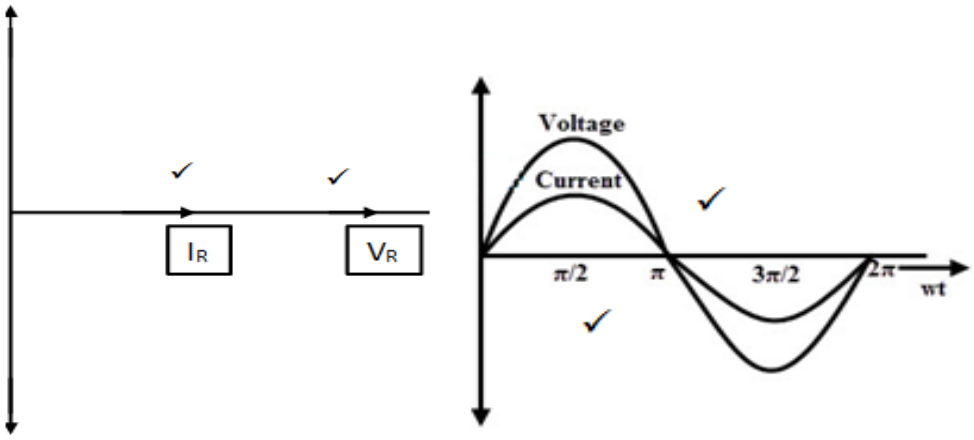

(4)

1.4 Algebraic sum is used when adding like scalar quantities✓ and vector addition when adding vector quantities. ✓ (2)

[18]

QUESTION 2: DOMESTIC APPLIANCES

2.1 A stationary appliance is an appliance that is normally not moved✓ or cannot easily be moved while in operation. ✓ (2)

2.2
- A temperature probe or gas filled sensor bulb is located inside the oven cavity. This sensor bulb is connected to the thermostat switch by means of a capillary tube. ✓
- As the temperature of the air inside the oven cavity increases, so does the temperature of the gas inside the sensor bulb. ✓
- Once the desired temperature is reached, the gas from the sensor bulb is forced through the capillary tube to the thermostat switch. This inrush of gas into the bellows causes the bellows to expand and open the contacts. ✓
- As the oven cools down, the gas contracts and the contacts close again. ✓ (4)

2.3
- The surrounding air is drawn in by a fan and passed over the fins of a radiator type device called an evaporator. ✓
- The heat energy from the air is absorbed by the refrigerant which is in liquid form. ✓
- This refrigerant reaches boiling point at -26 ˚C. So whether the air is warm or cool, it will cause the refrigerant to boil, changing it into a vapour. ✓
- The vapour is then compressed, raising its pressure and temperature. This hot vapour flows through a copper coil in the water tank. ✓
- Heat energy from the copper coil heats the water while refrigerant starts cooling down. ✓
- The cooled refrigerant then condenses into a liquid and returns to the evaporator. ✓

(6)
[12]

QUESTION 3: LIGHTING SYSTEMS

3.1 3.1.1 False ✓

3.1.2 False ✓

3.1.3 False ✓

(3 x 1) (3)

3.2 3.2.1 An electric current is passed through the tungsten filament, ✓ heating the filament until it glows. ✓ (2)

3.2.2
- Desk lamps
- Table lamps
- Chandeliers
- Accent lighting
- Closets

(Any 2 x 1) (2)

3.3 Basic level of illumination throughout an area. (1)
[8]

QUESTION 4: PROGRAMMABLE LOGIC CONTROLLER

4.1 A solid-state computer designed to perform logical decision making✓ for control applications and in an industrial environment. ✓ (2)

4.2
- Automation of manufacturing process
- Traffic lights
- Motor starters
- Process control

(Any 3 x 1) (3)
[5]

QUESTION 5: DIRECT CURRENT MACHINES

5.1
- Constant losses ✓
- Variable losses ✓ (2)

5.2
- Direct method ✓
- Indirect method ✓
- Regenerative method (Back-to-back) ✓ (3)

5.3 $P = 3$; $P_{out} = 20\ kW$; $V = 400\ V$; $C = 2$; $R_a = 0{,}4\ \Omega$

$R_{SH} = 100\ \Omega$ $\emptyset = 30mWb$ $\eta = 86\%$

5.3.1 $P_{in} = \frac{P_{out}}{\eta}$

$P_{in} = \frac{20\ 000}{0{,}86}$ ✓

$P_{in} = 23\ 255{,}814\ W$ ✓

$I_L = \frac{P_{in}}{V}$

$= \frac{23255{,}814}{400}$

$= 58{,}14\ A$ ✓

$I_{SH} = \frac{V}{R_{SH}}$

$= \frac{400}{100} = 4\ A$ ✓

$I_a = I_L - I_{SH}$

$= 58{,}14 - 4 = 54{,}14\ A$ ✓

$E = V - I_a R_a$

$E = 400 - [(54{,}14)(0{,}4)]$ ✓

$= 378{,}344\ V$ ✓ (7)

5.3.2 $Z = 60 \times 4 = 240\ conductors$ ✓

$E = \frac{2P\phi ZN}{60C}$

$N = \frac{60 \times 2 \times 378{,}344}{2 \times 3 \times 240 \times 30 \times 10^{-3}}$ ✓

$= 1\ 050{,}956\ r/min$ ✓ (3)

[15]

QUESTION 6: ALTERNATING CURRENT MACHINES

6.1 6.1.1 $V_{PH} = \frac{V_L}{\sqrt{3}}$

$= \frac{1100}{\sqrt{3}}$ ✓

$= 635{,}085\ V$ ✓ (2)

6.1.2 $N_S = \frac{60f}{P}$

$= \frac{60 \times 50}{2}$ ✓

$= 1500\ r/min$ ✓ (2)

6.2 An overexcited synchronous motor works at a leading power factor✓ and a normally excited synchronous motor works at unity power factor. ✓ These motors are used to both extend the plant in which they are used to drive mechanical loads✓ and at the same time improve the overall power factor of the plant. ✓ (4)

6.3 Difference between the synchronous speed of the magnetic field and actual speed of the rotor in an induction motor. (2)

[10]

QUESTION 7: TRANSFORMERS

7.1
- Operates at higher efficiency.
- They are smaller in size.
- They have better voltage regulation than two winding transformers.
- They cost less because they require less copper.

(4 x 1) (4)

7.1
- Starters for large induction motors.
- Voltage boosters to correct voltage drops in cable.

(2 x 1) (2)

7.3 In the event of a short circuit, the volume of gas produced causes an inrush of oil ✓ into the relay chamber, ✓ lifting the flap. ✓ The mercury switch then activates the tripping circuit. ✓ (4)

[10]

QUESTION 8: EARTHING SYSTEMS

8.1 8.1.1 System earthing relates to the earthing of a current-carrying conductor. ✓ In electricity supply systems, system earthing is obtained by earthing the supplier's neutral conductor or earthing the star point or neutral conductor of a transformer or alternator. ✓

8.1.2 Equipment earthing relates to the earthing of non-current carrying✓ metal frames, enclosures, conduits, frames of machines and any other metallic structure that might make contact with a live conductor. ✓

(2 x 2) (4)

8.2

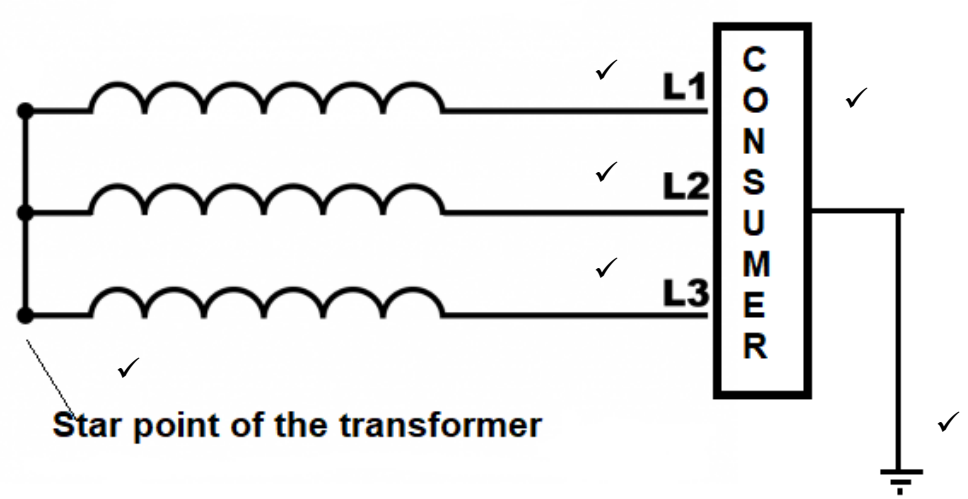

(6)
[10]

QUESTION 9: POWER MANAGEMENT

9.1 9.1.1 A timer that operates an electronic switch controlled by a timing mechanism.✓✓ (2)

9.1.2 Remote controlled switch that turns off the power supply to your geyser during peak periods.✓✓ (2)

9.2

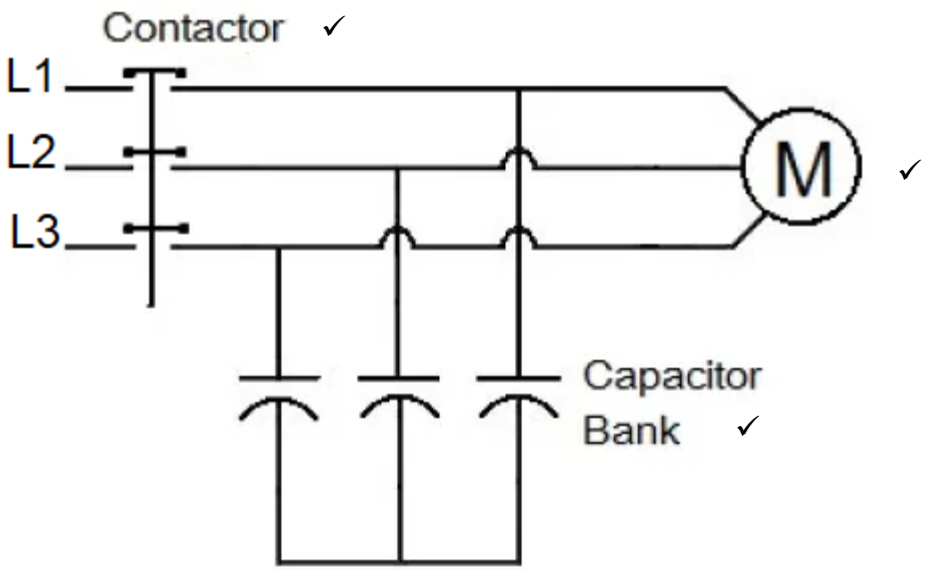

(3)
[7]

QUESTION 10: RENEWABLE ENERGY

10.1
- Solar energy is a renewable energy source.
- Solar panels can be installed anywhere, on buildings, carports, and in the fields.
- Reduces dependence on fossil fuels.
- Solar power does not contribute to any greenhouse gases.
- Solar energy has diverse applications.
- Requires little maintenance.
- Helps consumers to reduce their electricity bills.
- Relies strain on the national grid.

(Any 3 x 1) (3)

10.2 UPS is an electrical device that provides emergency electrical energy✓ without interruption to a load during a power failure, load shedding or any disturbance to the national grid. ✓ (2)
[5]

TOTAL: 100