higher education & training

Department:
Higher Education and Training
REPUBLIC OF SOUTH AFRICA

MARKING GUIDELINE

NATIONAL CERTIFICATE

ELECTRO-TECHNOLOGY N3

6 December 2023

This marking guideline consists of 9 pages.

Copyright reserved

QUESTION 1

1.1 D
1.2 C
1.3 A
1.4 B
1.5 C
1.6 D
1.7 A
1.8 B
1.9 A
1.10 D

(10 × 1) **[10]**

QUESTION 2

2.1

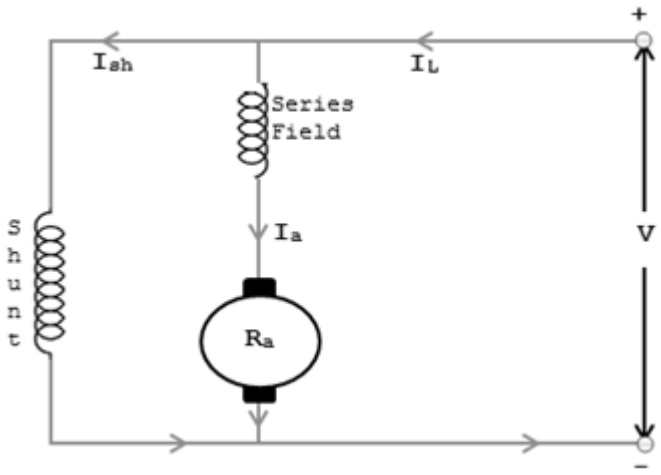

(1 mark each for armature, series field and shunt field) (3)

2.2 A generator is said to be undercompounded if the full-load terminal voltage✓ is less than the no-load terminal voltage.✓ (2)

2.3
- Battery chargers
- Excitation for AC generators (2)

2.4 $I_L = 40\ A$
$V = 200\ V$
$R_{se} = 0{,}25\ \Omega$
$R_a = 0{,}3\ \Omega$

$I_L = I_a = I_{se} = 40\ A$

$E = V + I_a R_a + I_{se} R_{se}$
$= 200 + (40)(0{,}3)✓ + (40)(0{,}25)✓$
$= 222\ V✓$ (3)
[10]

QUESTION 3

3.1 The system in the coil of an electric motor that opposes the current flowing through the coil when the armature rotates. ✓✓✓ (3)

3.2 $p = 3$
$N = 1\,500 r/min$
$E = 230\ V$
$c = 2 \times 3 = 6$
$Z = 700$ conductors

$$E = \frac{2\emptyset NpZ}{60c}$$

$$\emptyset = \frac{60Ec}{2NpZ} ✓$$

$$= \frac{(60)(230)(6)}{(2)(1\,500)(3)(700)} ✓✓$$

$= 0{,}013$ Wb **OR** $13{,}143$ mWB✓ (4)

3.3

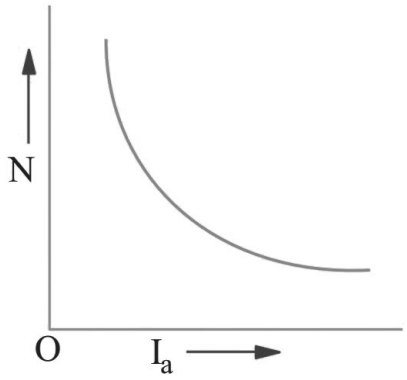

(1 mark each for the speed (N), armature current (I_a) and correct curve shape) (3)
[10]

QUESTION 4

4.1

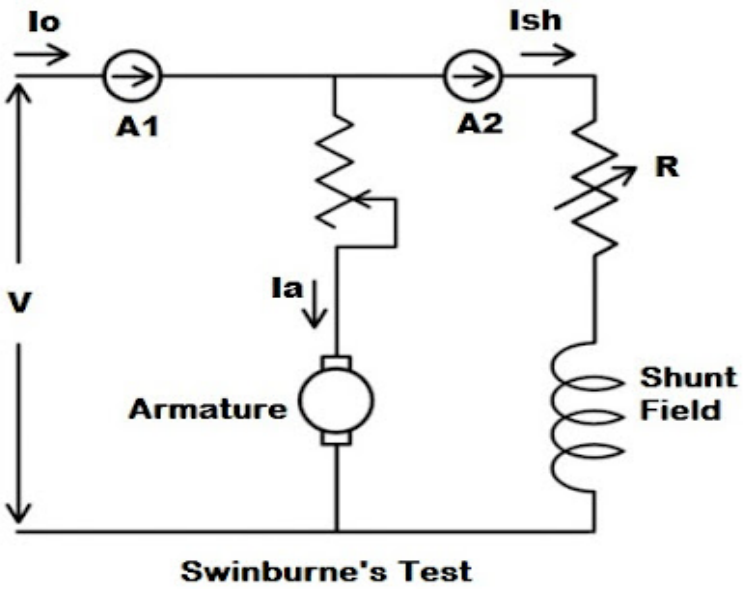

Swinburne's Test

(1 mark each for the armature, shunt field, ammeter 1 and 2 and 1 mark for correct sketch) (5)

4.2
- Eddy current loss
- Hysteresis loss

(Any 1 × 1) (1)

4.3 $\mathrm{P} = 25\ \mathrm{kW}$
$\mathrm{V} = 220\ \mathrm{V}$
$\mathrm{I}_2 = 35\ \mathrm{A}$

$$I_1 = \frac{P}{V} = \frac{25 \times 10^3}{220}\checkmark = 113{,}636\ \mathrm{A}\checkmark$$

$$\eta = \sqrt{\frac{I_1}{I_1 + I_2}} \times 100$$

$$\eta = \sqrt{\frac{113{,}636}{113{,}636 + 35}} \times 100\checkmark$$

$$\eta = 87{,}437\%\checkmark$$ (4)

[10]

QUESTION 5

5.1 Form factor is the ratio of the rms value✓ to the average value✓ of the waveform. (2)

5.2 $E_{max} = 220\ V, F = 50\ Hz$

5.2.1
$$E_{rms} = 0{,}707 \times E_{max}$$
$$= 0{,}707 \times 220\checkmark$$
$$= 155{,}54\ V\checkmark$$ (2)

5.2.2
$$E_{ave} = 0{,}637 \times E_{max}$$
$$= 0{,}637 \times 220\checkmark$$
$$= 140{,}14\ V\checkmark$$ (2)

5.2.3
$$e = 220 \sin 2\pi ft$$
$$180 = 220 \sin [(2\pi)(50)\ t \times (57{,}3)]\checkmark$$
$$[(2\pi)(50)\ t \times (57{,}3)] = \sin^{-1} 0{,}818\checkmark$$
$$t = \frac{54{,}885}{(2\pi)(50)(57{,}3)}\checkmark$$
$$= 0{,}003\ sec\ \textbf{OR}\ 3{,}049\ ms\checkmark$$ (4)

[10]

QUESTION 6

$L = 20\ mH, R = 9\ \Omega, V = 100\ V, F = 50\ Hz$

6.1
$$X_L = 2\pi fl$$
$$= 2\pi \times 50 \times 0{,}02$$
$$= 6{,}283\ \Omega\checkmark$$ (1)

6.2
$$Z = \sqrt{R^2 + X_L^2}$$
$$= \sqrt{9^2 + (6{,}283)^2}\checkmark$$
$$= 10{,}976\ \Omega\checkmark$$ (2)

6.3
$$I_T = \frac{V}{Z}$$
$$= \frac{100}{10{,}976}\checkmark$$
$$= 9{,}111\ A\checkmark$$ (2)

6.4 $V_R = IR$
$= 9{,}111 \times 9$✓
$= 81{,}999$ V✓

$V_L = IX_L$
$= 9{,}111 \times 6{,}283$✓
$= 57{,}244$ V✓ (2 + 2) (4)

6.5 $\cos \emptyset = \frac{R}{Z}$

$= \frac{9}{10{,}976}$

$= 0{,}82$✓ (1)
[10]

QUESTION 7

$V_L = 400$ V, $I_L = 30$ A, $\cos\theta = 0{,}9$ lagging

7.1 $P_{in} = \sqrt{3}\, V_L\, I_L \cos\theta$
$= \sqrt{3}\,(400)(30)(0{,}9)$✓
$= 18\,706{,}149$ W **OR** 18,706 kW✓

7.2 $kVA = \frac{\sqrt{3}V_L I_L}{1\,000}$

$= \frac{\sqrt{3} \times 400 \times 30}{1\,000}$✓

$= 20{,}785$ kVA✓

7.3 $I_{ph} = \frac{30}{\sqrt{3}}$✓ $= 17{,}321$ A✓

7.4 $\cos\theta = 0{,}9$
$\theta = \cos^{-1} 0{,}9$✓
$= 25{,}842°$✓

7.5 $Q = \sqrt{3}\, V_L\, I_L \sin\theta$
$= \sqrt{3}(400)(30)(\sin 25{,}842°)$✓
$= 9\,059{,}823$ Var **OR** 9,06 kVAr✓

(5 × 2) **[10]**

QUESTION 8

8.1
- Air cooling
- Oil cooling (Any ONE) (1)

8.2 $V_1 = 12\ \text{kV}, V_2 = 230\ \text{V}, N_1 = 3\ 800\ \text{turns}$, single-phase transformer

8.2.1 $\text{Turns ratio} = \frac{V_1}{V_2} : \frac{V_2}{V_2} = \frac{12\ 000}{230} : \frac{230}{230}$ ✓✓ $= 52:1$✓ (3)

8.2.2 $N_2 = V_2 \frac{N_1}{V_1} = 230\left(\frac{3\ 800}{12\ 000}\right)$ ✓ $= 72{,}83\ \text{turns}$✓ **OR** $73\ \text{turns}$✓ (2)

8.2.3 $I_2 = 1\ 100\ \text{A}$

$I_1 = V_2 \frac{I_2}{V_1} = 230\left(\frac{1\ 100}{12\ 000}\right)$ ✓ $= 21{,}083\ \text{A}$✓

OR

$I_1 = I_2 \frac{N_2}{N_1} = 1\ 100\left(\frac{72{,}83}{3\ 800}\right)$ ✓ $= 21{,}083\ \text{A}$✓ (2)

8.2.4

$S = V_1 I_1$	**OR**	$S = V_2 I_2$
$= (12\ 000)(21{,}083)$✓		$= (230)(1\ 100)$✓
$= 252{,}996\ \text{kVA}$✓		$= 253\ \text{kVA}$✓

(2)

[10]

QUESTION 9

9.1 **Advantages**
- Reasonably cheap
- Robust construction
- Can be used on both AC and DC supplies (Any TWO)

Disadvantages
- Nonlinear (uneven) scales
- Accuracy influenced by stray magnetic fields and temperature changes
- Reasonably difficult to calibrate (Any TWO)

(2 + 2) (4)

9.2 $R_m = 10\ \Omega, I_m = 12\ mA$

9.2.1

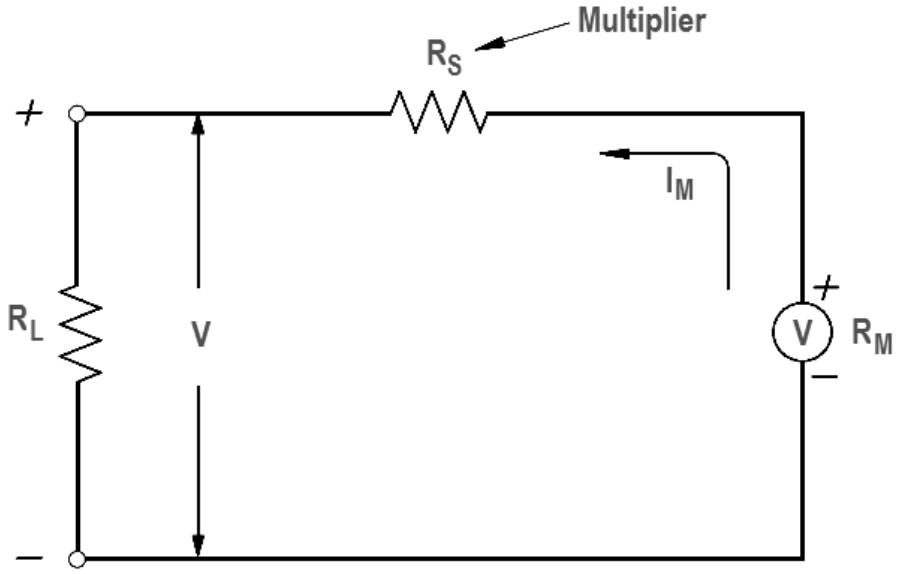

(1 mark each for the meter and multiplier resistor and 1 mark for correct sketch) (3)

9.2.2 $$R_{se} = \frac{V}{I_m} - R_m$$

$$= \frac{300}{12 \times 10^{-3}} ✓ - 10 ✓$$

$$= 24\ 990\ \Omega \textbf{ OR } 24{,}99\ k\Omega ✓$$ (3)

[10]

QUESTION 10

10.1
- Motor speed control
- Relay control
- Regulated power supplies
- Battery chargers
- Time-delay circuits
- Static switches
- Phase control
- Heater control

(Any 4 × 1) (4)

10.2 n = 3

Number of possibilities = 2^n

$= 2^3 ✓$

= 8 possibilities✓ (2)

10.3 10.3.1 $110{,}11_2 = (1 \times 2^2) + (1 \times 2^1) + (0 \times 2^0) + (1 \times 2^{-1}) + (1 \times 2^{-2})$✓
$= 6{,}75_{10}$✓

10.3.2

	125 × 2
0	**250** × 2
0	**500** × 2
1	**000**

√√

$0{,}125_{10} = 0{,}001_2$✓

(2 × 2) (4)
[10]

TOTAL: 100

Copyright reserved